Simbolo

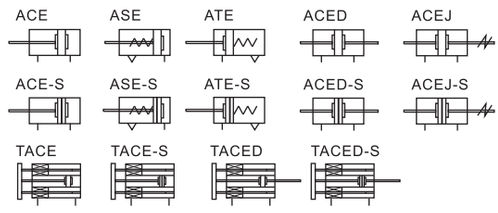

ACE

Caratteristiche

1. Dimensioni e fissaggi come da normativa ISO;
2. Testate fissate con vite autofilettanti;
3. Camicia trattata internamente con processo di anodizzazione, per ottenere una maggiore durabilità.
4. Doppia guarnizione pistone , garantisce un'ottima tenuta;
5. Struttura compatta, permette di risparmiare fino al 50% dello spazio di installazione rispetto ad un cilindro ISO15552 di pari alesaggio;
6. Scanalature per sensori fine-corsa disposti su 3 lati del cilindro per un fissaggio più agevole;
7. Ammortizzo interno, permette di assorbire impatti e velocità elevate.
8. Accessori per il fissaggio venduti separatamente.

Specifiche

Alesaggio(mm)		12	16	20	25	32	40	50	63	80	100	125
Azione		Doppio effetto										
		Semplice effetto stelo retratto, Semplice effetto stelo esteso										–
Fluido		Aria (filtrata a 40μm)										
Pressione di esercizio	Semplice effetto	0.1~1.0MPa(14~145psi)										
	Doppio effetto	0.2~1.0MPa(28~145psi)										
Massima pressione di esercizio		1.5MPa(215psi)										
Temperatura di esercizio ℃		-20~80										
Velocità di esercizio mm/s		Doppio effetto:30~500 Semplice effetto:50~500										
Tolleranza sulla corsa		Corsa≤150 $^{+1.0}_{0}$ Corsa>150 $^{+1.4}_{0}$										
Ammortizzo		Bumper interno										
Filettatura ①		M5×0.8				1/8"						G1/4

① Disponibile con filettaura G; Note: Per i sensori fine corsa fare riferimento alle pagine 351~372.

Corsa

		Alesaggio(mm)	Corsa standard(mm)	Massima corsa
Common tipo	Doppio effetto	12	5 10 15 20 25 30 35 40 45 50	50
		16	5 10 15 20 25 30 35 40 45 50 55 60 70 75	75
		20	5 10 15 20 25 30 35 40 45 50 55 60 70 75 80 90 100	100
		25	5 10 15 20 25 30 35 40 45 50 55 60 70 75 80 90 100 110 120 125 150	150
		32 40	5 10 15 20 25 30 35 40 45 50 55 60 70 75 80 90 100 110 120 125 150 160 175 200	200
		50 63	5 10 15 20 25 30 35 40 45 50 55 60 70 75 80 90 100 110 120 125 150 160 175 200 225 250	250
		80 100 125	5 10 15 20 25 30 35 40 45 50 55 60 70 75 80 90 100 110 120 125 150 160 175 200 225 250 275 300	300
	Semplice effetto	12	5 10	10
		16~100	5 10 15 20 25	25
Con sistema antirotazione	Doppio effetto	12	5 10 15 20 25 30 35 40 45 50	50
		16	5 10 15 20 25 30 35 40 45 50 55 60 70 75	75
		20 25	5 10 15 20 25 30 35 40 45 50 55 60 70 75 80 90 100	100
		32 40	5 10 15 20 25 30 35 40 45 50 55 60 70 75 80 90 100	100
		50 63	5 10 15 20 25 30 35 40 45 50 55 60 70 75 80 90 100	100
		80 100	5 10 15 20 25 30 35 40 45 50 55 60 70 75 80 90 100	100

Note: ① Se la corsa richiesta è maggiore della massima corsa standard, si prega di contattare l'azienda per dettagli circa i dettagli dimensionali;
② Cilindri con corse non standard ma non superiori alla corsa standard massima indicate a catalogo vengono prodotti facendo riferimento alla corsa standard superiore. Per le dimensioni degli ingombri fare riferimento alle corse standard superiori. Ad esempio, il cilindro con corsa non standard 23mm avrà gli ingombri del cilindro standard corsa 25mm.

Codice di ordinazione

ACE 20×30 S B □ G

ACED 20×30 S B □ G

ACEJ 20×30–30 S B □ G

Specifighe

ACE: cilindro compatto (doppio effetto)
ASE: cilindro compatto (semplice effetto stelo retratto)
ATE: cilindro compatto (semplice effetto stelo esteso)
ACED: cilindro compatto (stelo passante)
ACEJ: cilindro compatto (corsa regolabile)
TACE: cilindro compatto (con sistema antirotazione)
TACED:cilindro compatto (stelo passante, con sistema antirotazione)

Alesaggio

Specifiche	Alesaggio
ACE	12 16 20 25 32 40 50 63 80 100 125
ASE/ATE	12 16 20 25 32 40 50 63 80 100
ACED/ACEJ	12 16 20 25 32 40 50 63 80 100 125
TACE/TACED	12 16 20 25 32 40 50 63 80 100

corsa

Tabella corse disponibili

Corsa regolabile

Specifiche	Corsa regolabile
ACEJ	10：10mm
	20：20mm
	30：30mm
	40：40mm
	50：50mm
	75：75mm
	100：100mm
Altre specifiche	Non presenti in questo codice

Filettatura ②

G: G

Modalità di fissaggio ①

Specifiche	Fissaggi
Tutti prodotti	Vuoto: nessun fissaggio
ACE ASE ATE	FA: flangia anteriore
	FB: flangia posteriore
	CA: ceniera maschio
	CB: cerniera femmina
	CR: controcerniera
	FTC: ceniera anteriore con perni
	LB: piedini
	SDB: cerniera
ACED ACEJ	FA: flangia anteriore
	FTC: ceniera anteriore con perni
	LB: piedini
TACE	FB: flangia posteriore
	CA: ceniera maschio
	CB: cerniera femmina
	CR: controcerniera
	FTC: ceniera anteriore con perni
TACED	FB: flangia posteriore

Filettatura stelo

Specifiche	Filettatura stelo
ACE/ASE ATE ACED/ACEJ	Vuoto: femmina
	B: maschio
	N: non filettato
TACE/TACED	Non presenti in questo codice

Magnete

Vuoto: senza magnete
S: con magnete

① Per i dettagli relativi ai fissaggi fare riferimento a pagina 202. CR è da usarsi in copia con CB, SDB con CA, FTC con TCM2;
② Se la filettatura è M5, questa posizione è vuota.

Struttura interna

ACE-S

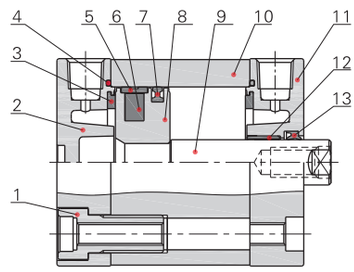

TACE-S

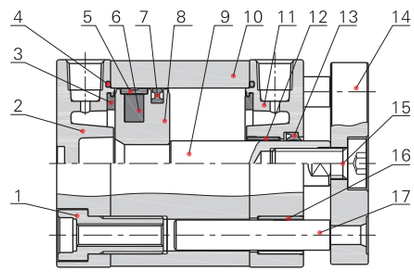

Nr.	Voce	Materiale
1	Vite	Acciaio al carbonio
2	Testata posteriore	Lega d'alluminio
3	Ammortizzo	TPU
4	O-ring	NBR
5	Guarnizione	Φ12~20: non presente Altri: materiali antiusura
6	Magnete	Φ12~20: neodimio Altri: polimero
7	O-ring pistone	TPU
8	Pistone	Lega di alluminio
9	Stelo	Φ12~20: acciaio inox Altri: S45C
10	Camicia	Lega di alluminio
11	Testata anteriore	Lega di alluminio
12	Guarnizione	Φ12~25: non presente Altri: materiali antiusura
13	O-ring	NBR
14	Piastra	Lega di alluminio
15	Vite	Acciaio al carbonio
16	Guarnizione	Materiali antiusura
17	Guida	Φ12~40: acciaio inox Altri: S45C

Struttura esterna

Modello:ACE

Φ12

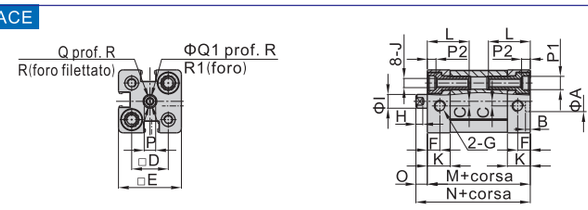

Φ16~Φ25

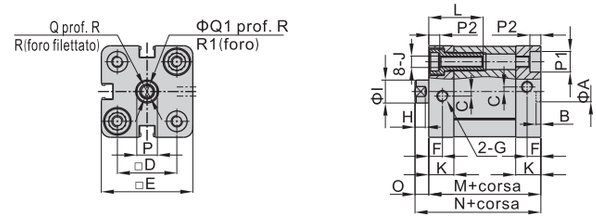

Φ32~Φ63

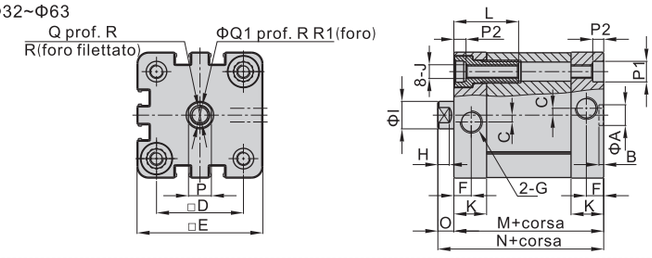

Φ80~Φ125

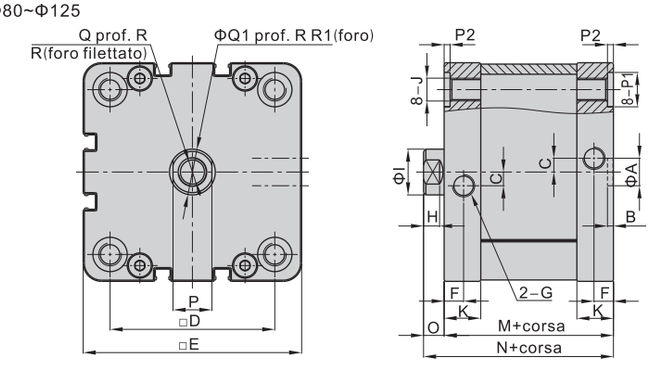

Alesaggio\Voce	A	B	C	D	E	F	G	H	I	J	K	L
12	9	2.1	2	16	27.5	5.5	M5×0.8	3.7	6	M4×0.7	10	18.3
16	9	2.1	2	18	30	5.5	M5×0.8	3.7	8	M4×0.7	10	18.3
20	9	2.1	2	22	35.5	6	M5×0.8	4.5	10	M5×0.8	10.5	23.8
25	9	2.1	2	26	40	6	M5×0.8	4.5	10	M5×0.8	11	23.8
32	9	2.1	3	32.5	49.5	7.6	1/8"	5	12	M6×1.0	14	28.3
40	9	2.1	3	38	55	7.6	1/8"	5	12	M6×1.0	14.3	28.3
50	12	2.6	3	46.5	65.5	7.6	1/8"	6	16	M8×1.25	14.3	30.3
63	12	2.6	4	56.5	75.5	7.6	1/8"	6	16	M8×1.25	15	30.3
80	12	2.6	6	72	95.5	8.5	1/8"	7	20	M10×1.5	16	–
100	12	2.6	7	89	113.5	10.5	1/8"	7	20	M10×1.5	19	–
125	12	2.6	8	110	134.5	10.5	G1/4	9	25	M12×1.75	20	–

Alesaggio\Voce	M	N	O	P	P1	P2	Q	Q1	R	R1
12	35	40	5	5	6	3.5	M3×0.5	3.3	8	1.5
16	35	40	5	7	6	3.5	M4×0.7	4.5	10	1.5
20	37	43	6	9	9	4.8	M6×1.0	6.5	14	2.6
25	39	45	6	9	9	4.8	M6×1.0	6.5	14	2.6
32	44	51	7	10	9	4.8	M8×1.25	8.5	16	3.3
40	45.5	52.5	7	10	9	4.8	M8×1.25	8.5	16	3.3
50	45.5	53.5	8	13	11	4.8	M10×1.5	10.5	20	4.7
63	49	57	8	13	11	4.8	M10×1.5	10.5	20	4.7
80	54	63	9	17	15	2.6	M12×1.75	12.5	20	6.1
100	67	76	9	17	15	2.6	M12×1.75	12.5	20	6.1
125	81	92	11	21	–	–	M16×2.0	16.5	25	7

Note: i modelli con e senza magnete hanno dimensioni identiche. Per i modelli con stelo filettato maschio, fare riferimento a pagina 201.

ACE

ACE

Modello:ASE

Φ12

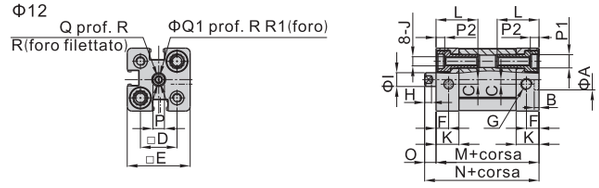

Φ16~Φ25

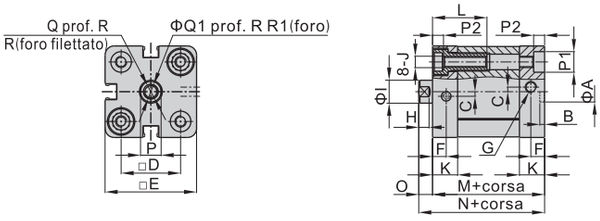

Φ32~Φ63

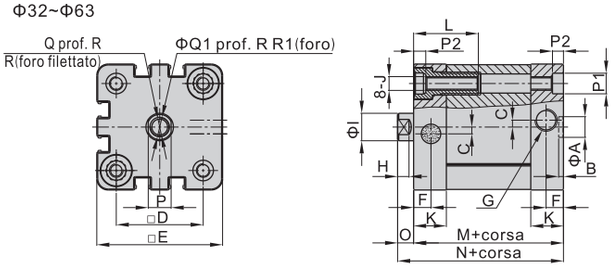

Φ80/Φ100

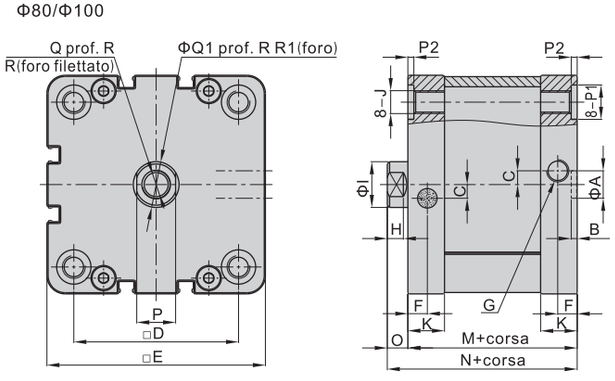

Alesaggio\Voce	A	B	C	D	E	F	G	H	I	J	K
12	9	2.1	2	16	27.5	5.5	M5×0.8	3.7	6	M4×0.7	10
16	9	2.1	2	18	30	5.5	M5×0.8	3.7	8	M4×0.7	10
20	9	2.1	2	22	35.5	6	M5×0.8	4.5	10	M5×0.8	10.5
25	9	2.1	2	26	40	6	M5×0.8	4.5	10	M5×0.8	11
32	9	2.1	3	32.5	49.5	7.6	1/8"	5	12	M6×1.0	14
40	9	2.1	3	38	55	7.6	1/8"	5	12	M6×1.0	14.3
50	12	2.6	3	46.5	65.5	7.6	1/8"	6	16	M8×1.25	14.3
63	12	2.6	4	56.5	75.5	7.6	1/8"	6	16	M8×1.25	15
80	12	2.6	6	72	95.5	8.5	1/8"	7	20	M10×1.5	16
100	12	2.6	7	89	113.5	10.5	1/8"	7	20	M10×1.5	19

Alesaggio\Voce	L	M	N	O	P	P1	P2	Q	Q1	R	R1
12	18.3	35	40	5	5	6	3.5	M3×0.5	3.3	8	1.5
16	18.3	35	40	5	7	6	3.5	M4×0.7	4.5	10	1.5
20	23.8	37	43	6	9	9	4.8	M6×1.0	6.5	14	2.6
25	23.8	39	45	6	9	9	4.8	M6×1.0	6.5	14	2.6
32	28.3	44	51	7	10	9	4.8	M8×1.25	8.5	16	3.3
40	28.3	45.5	52.5	7	10	9	4.8	M8×1.25	8.5	16	3.3
50	30.3	45.5	53.5	8	13	11	4.8	M10×1.5	10.5	20	4.7
63	30.3	49	57	8	13	11	4.8	M10×1.5	10.5	20	4.7
80	-	54	63	9	17	15	2.6	M12×1.75	12.5	20	6.1
100	-	67	76	9	17	15	2.6	M12×1.75	12.5	20	6.1

Note: i modelli con e senza magnete hanno dimensioni identiche. Per i modelli con stelo filettato maschio, fare riferimento a pagina 201.

Modello:ATE

Φ12

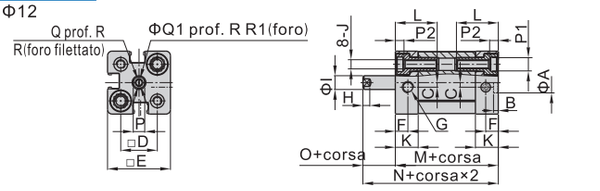

Φ16~Φ25

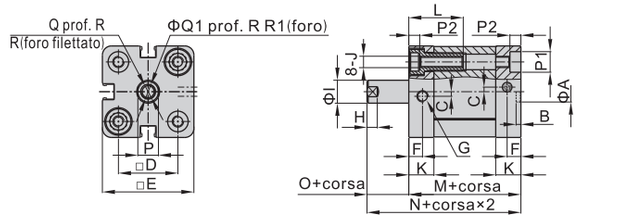

Φ32~Φ63

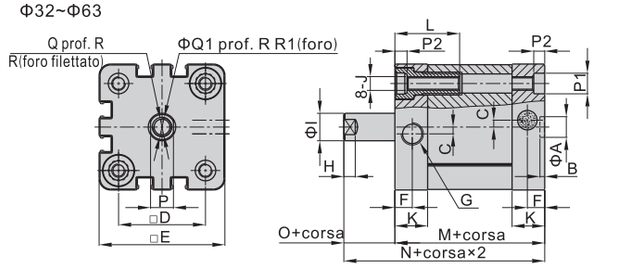

Φ80/Φ100

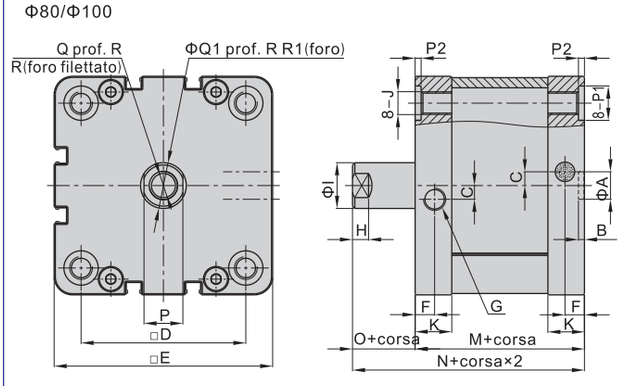

Alesaggio\Voce	A	B	C	D	E	F	G	H	I	J	K
12	9	2.1	2	16	27.5	5.5	M5×0.8	3.7	6	M4×0.7	10
16	9	2.1	2	18	30	5.5	M5×0.8	3.7	8	M4×0.7	10
20	9	2.1	2	22	35.5	6	M5×0.8	4.5	10	M5×0.8	10.5
25	9	2.1	2	26	40	6	M5×0.8	4.5	10	M5×0.8	11
32	9	2.1	3	32.5	49.5	7.6	1/8"	5	12	M6×1.0	14
40	9	2.1	3	38	55	7.6	1/8"	5	12	M6×1.0	14.3
50	12	2.6	3	46.5	65.5	7.6	1/8"	6	16	M8×1.25	14.3
63	12	2.6	4	56.5	75.5	7.6	1/8"	6	16	M8×1.25	15
80	12	2.6	6	72	95.5	8.5	1/8"	7	20	M10×1.5	16
100	12	2.6	7	89	113.5	10.5	1/8"	7	20	M10×1.5	19

Alesaggio\Voce	L	M	N	O	P	P1	P2	Q	Q1	R	R1
12	18.3	35	40	5	5	6	3.5	M3×0.5	3.3	8	1.5
16	18.3	35	40	5	7	6	3.5	M4×0.7	4.5	10	1.5
20	23.8	37	43	6	9	9	4.8	M6×1.0	6.5	14	2.6
25	23.8	39	45	6	9	9	4.8	M6×1.0	6.5	14	2.6
32	28.3	44	51	7	10	9	4.8	M8×1.25	8.5	16	3.3
40	28.3	45.5	52.5	7	10	9	4.8	M8×1.25	8.5	16	3.3
50	30.3	45.5	53.5	8	13	11	4.8	M10×1.5	10.5	20	4.7
63	30.3	49	57	8	13	11	4.8	M10×1.5	10.5	20	4.7
80	-	54	63	9	17	15	2.6	M12×1.75	12.5	20	6.1
100	-	67	76	9	17	15	2.6	M12×1.75	12.5	20	6.1

Note: i modelli con e senza magnete hanno dimensioni identiche. Per i modelli con stelo filettato maschio, fare riferimento a pagina 201.

Dimensioni modello filettato maschio

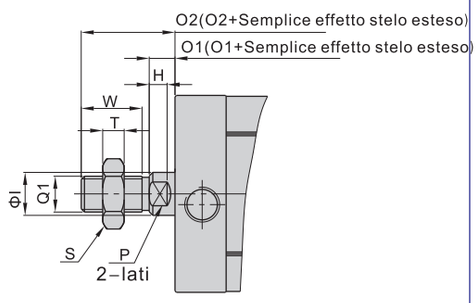

Alesaggio\Voce	O1	O2	W	S	T	Q1	H	I	P
12	5	15	9	8	4	M5×0.8	3.7	6	5
16	5	17	11	10	5	M6×1.0	3.7	8	7
20	6	22	15	12	6	M8×1.25	4.5	10	9
25	6	22	15	12	6	M8×1.25	4.5	10	9
32	7	26	17	17	6	M10×1.25	5	12	10
40	7	26	17	17	6	M10×1.25	5	12	10
50	8	30	20	17	7	M12×1.25	6	16	13
63	8	30	20	17	7	M12×1.25	6	16	13
80	9	37	26	23	8	M16×1.5	7	20	17
100	9	37	26	23	8	M16×1.5	7	20	17
125	11	51	38	26	10	M20×1.5	9	25	21

Modello:ACED

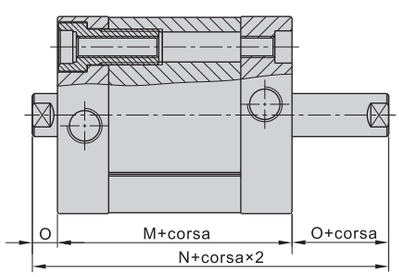

Modello:ACEJ

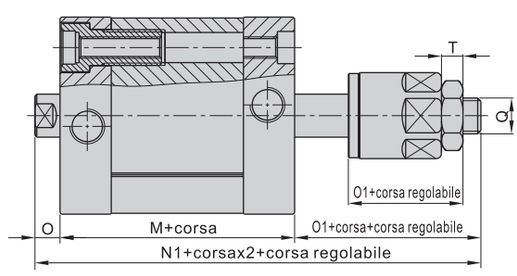

Alesaggio\Voce	M	N	N1	O	O1	T	Q
12	35	45	57	5	17	4	M5×0.8
16	35	45	61	5	21	5	M6×1.0
20	37	49	68	6	25	6	M8×1.25
25	39	51	70	6	25	6	M8×1.25
32	44	58	78	7	27	6	M10×1.25
40	45.5	59.5	79.5	7	27	6	M10×1.25
50	45.5	61.5	81.5	8	28	7	M12×1.25
63	49	65	85	8	28	7	M12×1.25
80	54	72	92	9	29	8	M16×1.5
100	67	85	105	9	29	8	M16×1.5
125	81	103	127.5	11	35.5	10	M20×1.5

Note: cilindri ACE con corse non standard hanno le stesse dimensioni dei cilindri con corse standard; cilindri con e senza magnete hanno le stesse dimensioni.

Modello:TACE

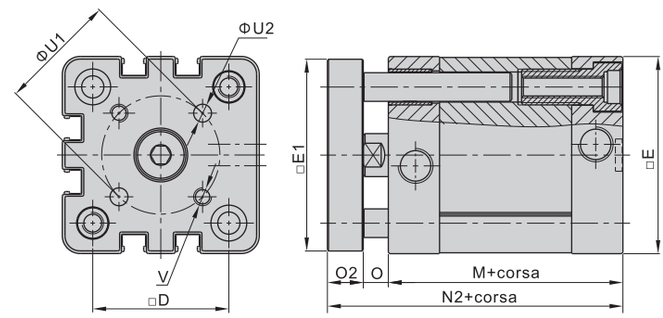

Modello:TACED

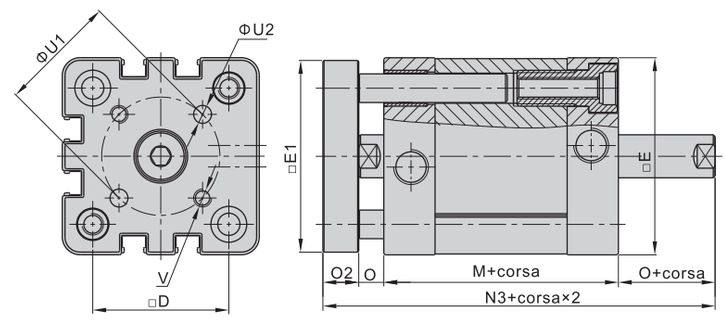

Alesaggio\Voce	D	E	E1	M	N2	N3	O	O2	U1	U2	V
12	16	27.5	26.5	35	46	51	5	6	12	3	M3×0.5
16	18	30	29	35	46	51	5	6	14	3	M3×0.5
20	22	35.5	34.5	37	51	57	6	8	17	4	M4×0.7
25	26	40	39	39	53	59	6	8	22	5	M5×0.8
32	32.5	49.5	48	44	61	68	7	10	28	5	M5×0.8
40	38	55	53.5	45.5	62.5	69.5	7	10	33	5	M5×0.8
50	46.5	65.5	64	45.5	65.5	73.5	8	12	42	6	M6×1.0
63	56.5	75.5	74	49	69	77	8	12	50	6	M6×1.0
80	72	95.5	94	54	77	86	9	14	65	8	M8×1.25
100	89	113.5	112	67	90	99	9	14	80	10	M10×1.5

Note: cilindri ACE con corse non standard hanno le stesse dimensioni dei cilindri con corse standard; cilindri con e senza magnete hanno le stesse dimensioni.

ACE

Table for floating joint and cylinder

Cylinder / Accessory	SE							SI								
	32	40	50	63	80	100	125	32	40	50	63	80	100	125	160	200
F-M10125F	●							●								
F-M12125F		●							●							
F-M16150F			●	●						●	●					
F-M20150F					●	●						●	●			

Cylinder / Accessory	SGC				SC						JSI						
	125	160	200	250	32	40	50	63	80	100	32	40	50	63	80	100	125
F-M10125F					●						●						
F-M12125F						●											
F-M14150F												●					
F-M16150F							●	●									
F-M18150F													●	●			
F-M20150F									●	●							

Cylinder / Accessory	ACP										ACQ									
	12	16	20	25	32	40	50	63	80	100	12	16	20	25	32	40	50	63	80	100
F-M08125F		●											●							
F-M10125F			●	●	●	●								●						
F-M12125F							●	●												
F-M14150F															●	●				
F-M16150F									●											
F-M18150F																	●	●		
F-M20150F										●										

Cylinder / Accessory	MA							MAL				MF			
	16	20	25	32	40	50	63	20	25	32	40	20	25	32	40
F-M06100F	●														
F-M08125F		●						●				●			
F-M10125F			●	●					●	●			●	●	
F-M12125F					●						●				
F-M14150F						●	●								●

Cylinder / Accessory	PB					MI							
	4	6	10	12	16	8	10	12	16	20	25	32	40
F-M03050F		●											
F-M04070F			●			●	●						
F-M05080F				●	●								
F-M06100F								●	●				
F-M08125F										●			
F-M10125F											●	●	
F-M12125F													●

Ordering code

F — M10 125 F

Accessories code

Screw thread

M3	M3
M4	M4
M5	M5
M6	M6
M08	M8
M10	M10
M12	M12
M14	M14
M16	M16
M18	M18
M20	M20

Thread pitch

050	0.5mm
070	0.7mm
080	0.8mm
100	1.0mm
125	1.25mm
150	1.5mm

Code

F	Floating Joint

Dimensions

M8\M10\M12\M14\M16\M18\M20

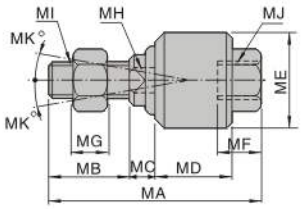

Type/Item	MA	MB	MC	MD	ME	MF	MG	MH	MI	MJ	MK
F-M08125F	51	20	6	17	24	11.5	6	8	M8 × 1.25	M8 × 1.25	13
F-M10125F	58	22	7	21	26	11.5	6	10	M10 × 1.25	M10 × 1.25	12
F-M12125F	58	22	8	21	28	11.5	7	12	M12 × 1.25	M12 × 1.25	12
F-M14150F	70	22.2	8.5	28	34.5	17	8	14	M14 × 1. 5	M14 × 1. 5	12
F-M16150F	90	27	10	41	44.5	19	8	17	M16 × 1. 5	M16 × 1. 5	7
F-M18150F	92	27	10	41	44.5	22	11	18	M18 × 1. 5	M18 × 1. 5	7
F-M20150F	102	29	13	46	53	22	10	22	M20 × 1. 5	M20 × 1. 5	10

M3\M4\M5\M6

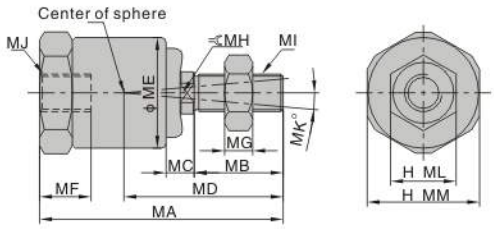

Type\Item	MA	MB	MC	MD	ME	MF	MG	MH	MI	MJ
F-M03050F	23.5	7.5	3	15	11.8	5.5	2.4	4	M3 × 0.5	M3 × 0.5
F-M04070F	26	9.5	3	17	11.8	5.5	3	4	M4 × 0.7	M4 × 0.7
F-M05080F	34.5	13.5	3.5	23	13.8	7.5	4	6	M5 × 0.8	M5 × 0.8
F-M06100F	34.5	13.5	3.5	23	13.8	7.5	4	6	M6 × 1. 0	M6 × 1. 0

Type\Item	ML	MM	Angle compensation	Radial direction compensation
F-M03050F	5.5	12	± 5°	0.5
F-M04070F	7	12	± 5°	0.5
F-M05080F	8	14	± 5°	0.5
F-M06100F	10	14	± 5°	0.5

I Knuckle

Table for I knuckle and cylinder

Cylinder / Accessory	SE							SI								
	32	40	50	63	80	100	125	32	40	50	63	80	100	125	160	200
F-M10125II	●							●								
F-M12125II		●							●							
F-M16150II			●	●						●	●					
F-M20150II					●	●						●	●			
F-M27200II							●							●		
F-M36200II															●	●

Cylinder / Accessory	SGC				SC					
	125	160	200	250	32	40	50	63	80	100
F-M10125II					●					
F-M12125II						●				
F-M16150II							●	●		
F-M20150II									●	●
F-M27200II	●									
F-M36200II		●	●							
F-M42200II				●						

Cylinder / Accessory	MA							MAL				MI							
	16	20	25	32	40	50	63	20	25	32	40	8	10	12	16	20	25	32	40
F-M04070II												●	●						
F-M06100II	●													●	●				
F-M08125II		●						●								●			
F-M10125II			●	●					●	●							●	●	
F-M12125II																			●
F-M12125IA					●						●								
F-M14150IJ						●	●												

Cylinder / Accessory	ACQ									
	12	16	20	25	32	40	50	63	80	100
F-M05080IQ	●									
F-M06100IQ		●								
F-M08125IQ			●							
F-M10125IQ				●						
F-M14150IQ					●	●				
F-M18150IQ							●	●		
F-M22150IQ									●	
F-M26150IQ										●

Cylinder / Accessory	JSI						
	32	40	50	63	80	100	125
F-M10125IJ	●						
F-M14150IJ		●					
F-M18150IJ			●	●			
F-M22150IJ					●		
F-M26150IJ						●	
F-M27200IJ							●

Cylinder / Accessory	MF			
	20	25	32	40
F-M08125IF	●			
F-M10125IF		●	●	
F-M14150IF				●

Cylinder / Accessory	PB				
	4	6	10	12	16
F-M04070IB			●		
F-M05080IB				●	●

Ordering code

F — M16 150 I I

Accessories code

Screw thread

M04	M4
M05	M5
M06	M6
M08	M8
M10	M10
M12	M12
M14	M14
M16	M16
M18	M18
M20	M20
M22	M22
M26	M26
M27	M27
M36	M36
M42	M42

Thread pitch

070	0.7mm
080	0.8mm
100	1.0mm
125	1.25mm
150	1.5mm
200	2.0mm

Knuckle

I	I Knuckle

Code

I	ISO standard type
J	JSI series
Q	ACQ series
A	MA series
B	PB series
F	MF series

Dimensions

ISO standard type

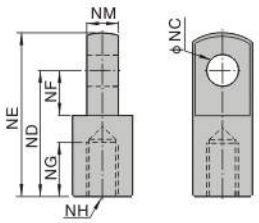

Type\Item	NC	ND	NE	NF	NG	NH	NM
F-M04070II	4	16	21	6.8	8	M4X0.7	3.9
F-M06100II	5	21	28	8.5	8	M6×1.0	6
F-M08125II	8	30	40	11	15	M8×1.25	8
F-M10125II	10	40	50	15	20	M10×1.25	10
F-M12125II	12	48	62	24	20	M12×1.25	12
F-M16150II	16	64	82	32	23	M16×1. 5	16
F-M20150II	20	80	102	40	30	M20×1. 5	20
F-M27200II	30	110	139	51	45	M27×2.0	30
F-M36200II	35	144	181	65	55	M36×2.0	35
F-M42200II	40	168	211	85	62	M42X2.0	40

PB Series

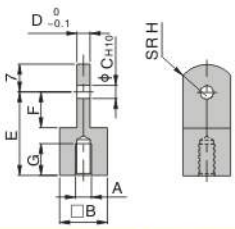

Type\Item	A	B	C	D	E	F	G	H
F-M04070IB	M4×0.7	12	3.3	3	21	9.1	7.5	8
F-M05080IB	M5×0.8	12	5	6.3	25	14.1	7.5	12

JSI Series

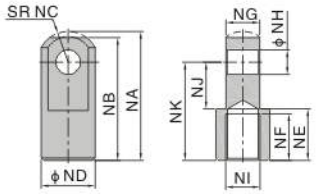

Type\Item	NA	NB	NC	ND	NE	NF	NG	NH	NJ	NK	NI
F-M10125IJ	42	40	12	20	17	14	13.8	10	16	30	M10×1.25
F-M14150IJ	52.5	50	12.5	22	21	19	13.8	10	19	40	M14×1.5
F-M18150IJ	66.5	64	16.5	28	27	24	19.8	14	24	50	M18×1. 5
F-M22150IJ	83.5	80	23.5	40	29	26	29.8	22	34	60	M22×1. 5
F-M26150IJ	83.5	80	23.5	40	29	26	29.8	22	34	60	M26×1. 5
F-M27200IJ	120.5	119	28.5	45	40	36	31.8	25	34	92	M27×2.0

MA Series

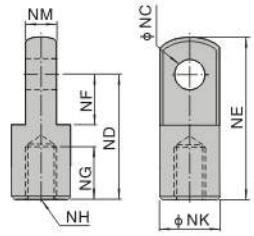

Type\Item	NC	ND	NE	NF	NG	NH	NK	NM
F-M12125IA	10	45	57	16.5	23	M12×1.25	24	14

ACQ Series

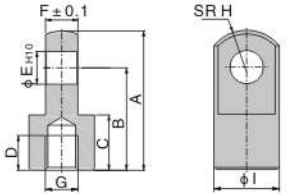

Type\Item	A	B	C	D	E	F	G	H	I
F-M05080IQ	21.5	16	9	6	5	4.7	M5x0.8	6.3	10
F-M06100IQ	32	25	11	8	5	6.2	M6x1.0	8.1	12
F-M08125IQ	34	25	13.5	8.5	8	7.7	M8x1.25	10.3	16
F-M10125IQ	41	30	16	11	10	9.7	M10x1.25	12.8	20
F-M14150IQ	42	30	16	14	10	17.6	M14x1.5	12	22
F-M18150IQ	56	40	20	18	14	21.6	M18x1.5	16	28
F-M22150IQ	71	50	23	21	18	27.6	M22x1.5	21	38
F-M26150IQ	79	55	24	22	22	31.6	M26x1.5	24	44

MF Series

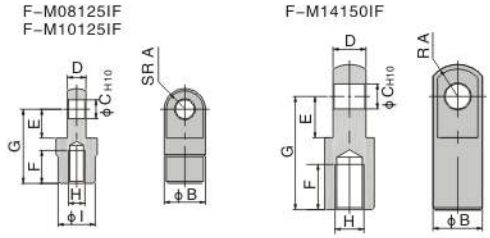

Type\Item	A	B	C	D	E	F	G	H	I
F-M08125IF	9.5	20	9	9	14	16	36	M8×1.25	18
F-M10125IF	9.5	20	9	9	14	18	38	M10×1.25	18
F-M14150IF	15	24	12	16	20	22	55	M14×1.5	–

Table for universal joint and cylinder

Cylinder / Accessory	SE							SI								
	32	40	50	63	80	100	125	32	40	50	63	80	100	125	160	200
F-M10125U	●							●								
F-M12125U		●							●							
F-M16150U			●	●						●	●					
F-M20150U					●	●						●	●			
F-M27200U							●							●		
F-M36200U															●	●

Cylinder / Accessory	SGC				SC						JSI						
	125	160	200	250	32	40	50	63	80	100	32	40	50	63	80	100	125
F-M10125U					●						●						
F-M12125U						●											
F-M14150U												●					
F-M16150U							●	●									
F-M18150U													●	●			
F-M20150U									●	●							
F-M27200U	●																●
F-M36200U		●	●														

Cylinder / Accessory	MI						PB		MF			MA				
	8	10	12、16	20	25、32	40	10	12、16	20	25、32	40	16	20	25、32	40	50、63
F-M04070U	●	●					●									
F-M05080U								●								
F-M06100U			●									●				
F-M08125U				●					●				●			
F-M10125U					●					●				●		
F-M12125U						●									●	
F-M14150U											●					●

Cylinder / Accessory	MAL				ACQ								ACP						
	20	25	32	40	12	16	20	25	32	40	50	63	12	16	20~40	50	63	80	100
F-M05080U					●														
F-M06100U						●							●						
F-M08125U	●						●							●					
F-M10125U		●	●					●							●				
F-M12125U				●												●	●		
F-M14150U									●	●									
F-M16150U																		●	
F-M18150U											●	●							
F-M20150U																			●

Ordering code

F — M10 125 U

- Accessories code
- Screw thread
- Thread pitch
- Code

Code	
U	Universal Joint

Screw thread	
M04	M4
M05	M5
M06	M6
M08	M8
M10	M10
M12	M12
M14	M14
M16	M16
M18	M18
M20	M20
M27	M27
M36	M36

Thread pitch	
070	0.7mm
080	0.8mm
100	1.0mm
125	1.25mm
150	1.5mm
200	2.0mm

Dimensions

M8 and below

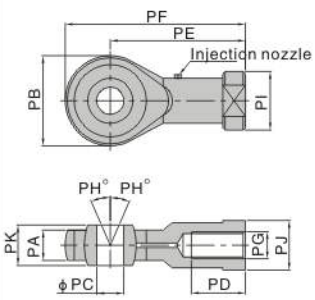

M10 and above

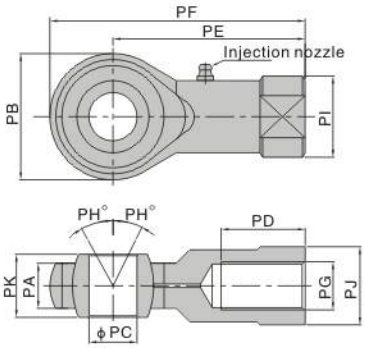

Type\Item	PA	PB	PC(H9)	PD	PE	PF	PG	PH	PI	PJ	PK
F-M04070U	6	18	4	10	27	36	M4×0.7	13	12.5	10	8
F-M05080U	6	18	5	10	27	36	M5×0.8	13	12.5	10	8
F-M06100U	6.8	20	6	12	30	40	M6×1.0	13	13	11	9
F-M08125U	9	24	8	16	36	48	M8×1.25	13	16	14	12
F-M10125U	11	26	10	20	43	56	M10×1.25	13	19	17	14
F-M12125U	12	32	12	22	50	66	M12×1.25	13	22	19	16
F-M14150U	14	36	14	28	57	75	M14×1.5	13	25	22	19
F-M16150U	15	40	16	28	64	84	M16×1.5	15	27	22	21
F-M18150U	16.5	46	18	30	71	94	M18×1.5	15	31	27	23
F-M20150U	18	46	20	33	77	100	M20×1.5	15	34	30	25
F-M27200U	24	66	28	51	103	136	M27×2.0	15	46	41	35
F-M36200U	27.5	80	35	56	125	165	M36×2.0	15	57.5	50	43

Table for Y knuckle and cylinder

Cylinder / Accessory	SE							SI								
	32	40	50	63	80	100	125	32	40	50	63	80	100	125	160	200
F-M10125YI	●							●								
F-M12125YI		●							●							
F-M16150YI			●	●						●	●					
F-M20150YI					●	●						●	●			
F-M27200YI							●							●		
F-M36200YI															●	●

Cylinder / Accessory	SGC				SC					
	125	160	200	250	32	40	50	63	80	100
F-M10125YI					●					
F-M12125YI						●				
F-M16150YI							●	●		
F-M20150YI									●	●
F-M27200YI	●									
F-M36200YI		●	●							
F-M42200YI				●						

Cylinder / Accessory	MA							MAL			
	16	20	25	32	40	50	63	20	25	32	40
F-M06100YI	●							●			
F-M08125YI		●									
F-M10125YI			●	●					●	●	
F-M12125YA					●						●
F-M14150YJ						●	●				

Cylinder / Accessory	ACQ									
	12	16	20	25	32	40	50	63	80	100
F-M05080YQ	●									
F-M06100YQ		●								
F-M08125YQ			●							
F-M10125YQ				●						
F-M14150YQ					●	●				
F-M18150YQ							●	●		
F-M22150YQ									●	
F-M26150YQ										●

Cylinder / Accessory	MI							
	8	10	12	16	20	25	32	40
F-M04070YE	●	●						
F-M06100YE			●	●				
F-M08125YE					●			
F-M10125YE						●	●	
F-M12125YI								●

Cylinder / Accessory	JSI						
	32	40	50	63	80	100	125
F-M10125YJ	●						
F-M14150YJ		●					
F-M18150YJ			●	●			
F-M22150YJ					●		
F-M26150YJ						●	
F-M27200YJ							●

Cylinder / Accessory	MF			
	20	25	32	40
F-M08125YF	●			
F-M10125YF		●	●	
F-M14150YF				●

Cylinder / Accessory	PB				
	4	6	10	12	16
F-M04070YB			●		
F-M05080YB				●	●

Ordering code

F — M16 150 Y I

Accessories code

Screw thread

M04	M4
M05	M5
M06	M6
M08	M8
M10	M10
M12	M12
M14	M14
M16	M16
M18	M18
M20	M20
M22	M22
M26	M26
M27	M27
M36	M36
M42	M42

Thread pitch

070	0.7mm
080	0.8mm
100	1.0mm
125	1.25mm
150	1.5mm
200	2.0mm

Knuckle

Y	Y Knuckle

Code

I	ISO standard type
E	ISO standard type (MI series M10 and below)
J	JSI series
Q	ACQ series
A	MA series
B	PB series
F	MF series

Dimensions

ISO standard type

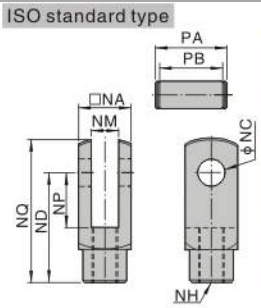

Type\Item	NA	NC	ND	NP	NQ	NM	NH	PA	PB
F-M06100YI	12	5	21	14	28	6	M6×1.0	17.2	12.5
F-M08125YI	16	8	30	15	40	8	M8×1.25	21.6	16.5
F-M10125YI	19	10	40	20	52	10	M10×1.25	25.6	20
F-M12125YI	25.4	12	48	24	62	12	M12×1.25	32.4	26.2
F-M16150YI	32	16	64	32	80	16	M16×1.5	39	33
F-M20150YI	44.4	20	80	40	102	20	M20×1.5	53.4	45
F-M27200YI	54	30	110	55	139	30	M27×2.0	64.2	55
F-M36200YI	70	35	144	73	179	35	M36×2.0	80.2	71
F-M42200YI	85	40	168	86	211	40.3	M42X2.0	115	93

PB Series

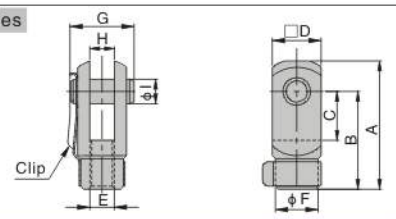

Type\Item	A	B	C	D	E	F	G	H	I
F-M04070YB	28	21	10.2	12	M4×0.7	10	15.5	3.2	3.3
F-M05080YB	28	21	10.2	12	M5×0.8	10	15.5	6.5	5

JSI Series

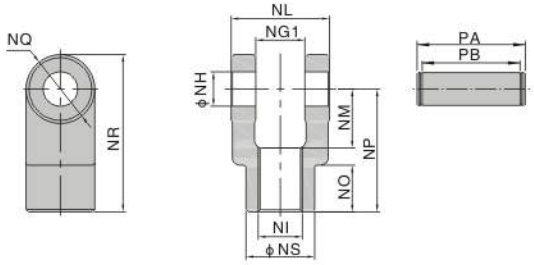

Type\Item	NG1	NH	NI	NL	NM	NO	NP	NQ	NR	NS	PA	PB
F-M10125YJ	14.2	10	M10×1.25	27.8	16	10	30	20	40	20	34.6	28.8
F-M14150YJ	14.2	10	M14×1.5	27.8	19	17	40	22	51	22	34.6	28.8
F-M18150YJ	20.2	14	M18×1.5	39.8	24	19	50	28	64	28	47	40.8
F-M22150YJ	30.2	22	M22×1.5	59.8	34	20	65	40	85	40	69.2	60.8
F-M26150YJ	30.2	22	M26×1.5	59.8	34	20	65	40	85	40	69.2	60.8
F-M27200YJ	32.2	25	M27×2.0	63.8	42	47	100	54	127	46	73.2	64.8

MA Series

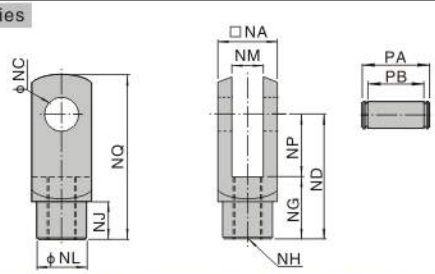

Type\Item	NA	NC	ND	NG	NH	NJ	NL	NM	NN	NP	NQ	PA	PB
F-M12125YA	25.4	10	45	25	M12×1.25	15	23	14	10	20	57	32	26.2

ISO standard type (MI series M10 and below)

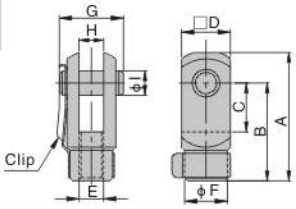

Type\Item	A	B	C	D	E	F	G	H	I
F-M04070YE	22	16	8	8	M4×0.7	7	11.5	4	4
F-M06100YE	32	24	12	12	M6×1.0	10	16	6	6
F-M08125YE	42	32	16	16	M8×1.25	14	21	8	8
F-M10125YE	52	40	20	19	M10×1.25	18	25	10	10

ACQ Series

F-M05080YQ
F-M06100YQ
F-M08125YQ
F-M10125YQ

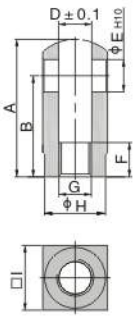

F-M14150YQ
F-M18150YQ
F-M22150YQ
F-M26150YQ

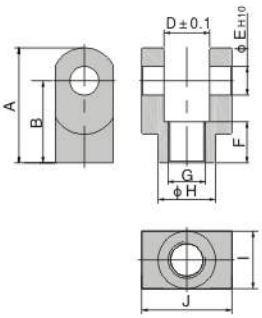

Type\Item	A	B	D	E	F	G	H	I	J
F-M05080YQ	22	16	5.3	5	6	M5x0.8	9	10	–
F-M06100YQ	28	21	6.6	5	11	M6x1.0	11	12	–
F-M08125YQ	34	25	8.3	8	8.5	M8x1.25	15	16	–
F-M10125YQ	41	30	10.3	10	10.5	M10x1.25	19	20	–
F-M14150YQ	42	30	18.4	10	16	M14x1.5	22	22	36
F-M18150YQ	56	40	22.4	14	20	M18x1.5	28	28	44
F-M22150YQ	71	50	28.4	18	23	M22x1.5	38	38	56
F-M26150YQ	79	55	32.4	22	24	M26x1.5	44	44	64

PIN

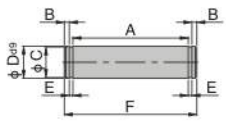

Type\Item	F-05080YQ	F-06100YQ	F-08125YQ	F-10125YQ	F-14150YQ	F-18150YQ	F-22150YQ	F-26150YQ
A	10.2	12.2	16.2	20.2	36.2	44.2	56.2	64.2
B	1.5	1.5	1.5	2	2	2	2	2.5
C	3	3	6	8	8	12	15	19
D	5	5	8	10	10	14	18	22
E	0.7	0.7	0.9	1.1	1.1	1.1	1.7	1.7
F	14.6	16.6	21	26.4	42.4	50.4	63.6	72.6

MF Series

F-M08125YF
F-M10125YF

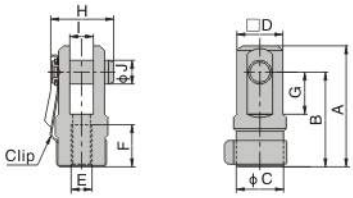

F-M14150YF

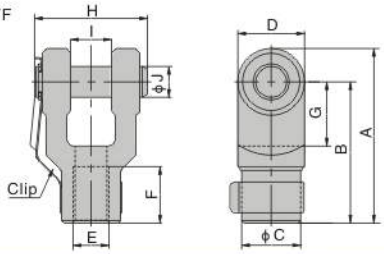

Type\Item	A	B	C	D	E	F	G	H	I	J
F-M08125YF	46	36	18	17.5	M8×1.25	16	16	24	9	9
F-M10125YF	48	38	18	17.5	M10×1.25	18	16	24	9	9
F-M14150YF	68	55	23	26	M14×1.5	22	25	44	16	12

Accessories

Ordering code

F–ACE 50 LB

- Accessory
- Model
- Bore size
- Accessory type ①

Mounting accessory	FA: FA type
	FB: FB type
	CA: CA type
	LB: LB type
	SDB: SDB type

① The listed accessories are for ACE cylinder. Accessories that are adaptable to other cylinders are not shown. Please refer to accessory list on P206 for selection and ordering information.

Accessory selection

Accessories / Cylinder model	Mounting accessory								
	LB	FA	FB	CA	CB	CR	SDB	FTC	TCM2
ACE	●	●	●	●	●	●	●	●	●
ASE/ATE	●	●	●	●	●	●	●	●	●
ACED/ACEJ	●	●	×	×	×	×	×	●	●
TACE	×	×	●	●	●	●	●	●	●
TACED	×	×	●	×	×	×	×	×	×

ACE

Accessories / Cylinder model			Knuckle ①				Sensor switch②	
			I	Y	F	U	CS1-E	DS1-E
ACE	Female thread	Standard	×	×	×	×	×	×
		With magnet	×	×	×	×	●	●
	Male thread	Standard	●	●	●	●	×	×
		With magnet	●	●	●	●	●	●
ASE ATE	Female thread	Standard	×	×	×	×	×	×
		With magnet	×	×	×	×	●	●
	Male thread	Standard	●	●	●	●	×	×
		With magnet	●	●	●	●	●	●
ACED ACEJ	Female thread	Standard	×	×	×	×	×	×
		With magnet	×	×	×	×	●	●
	Male thread	Standard	●	●	●	●	×	×
		With magnet	●	●	●	●	●	●
TACE TACED	Female thread	Standard	×	×	×	×	×	×
		With magnet	×	×	×	×	●	●

①The I knuckle and Y knuckle for bore Φ12 are adaptable to ACQ cylinders, and other knuckles are common parts. Please refer to P377~380 for knuckle detail.
② Please refer to P381~402 for detail of sensor switch.

Material of accessories

Accessoriies / Bore size	Mounting accessory									Knuckle			
	LB	FA	FB	CA	CB	CR	SDB	FTC	TCM2	I	Y	F	U
12~25	△	●	●	●	–	–	△	■	●	□	□	□	□
32~100	△	●	●	◇	◇	◇	–	■	●	□	□	□	□
125	–	◇	◇	◇	◇	◇	–	■	●	□	□	□	□

●——Aluminum alloy; ■——Cast iron;
◇——Ductile Iron; △——SPCC; □——Carbon Steel;

Dimensions

LB

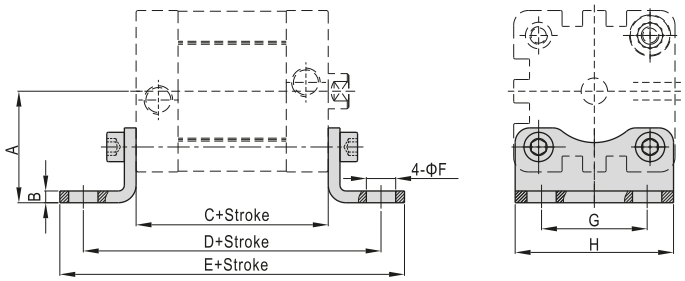

Bore size\Item	A	B	C	D	E	F	G	H
12	21	3	35	61	71	5.5	16	25
16	22	3	35	61	70.6	5.5	18	27
20	27	3.8	37	69	81.6	6.5	22	34
25	29	3.8	39	71	83.6	6.5	26	38
32	33.5	4	44	76	89	7	32	48
40	38	4	45.5	81.5	97.5	10	36	54
50	45	5	45.5	87.5	103.5	10	45	65
63	50	5	49	91	107	10	50	75
80	63	6	54	106	127	12	63	95
100	74	6	67	121	146	14.5	75	112

Note) Valve C in the above table is only for ACE series. Please refer to relevant content for valve C of other series.

FA\FB

Φ12~Φ25

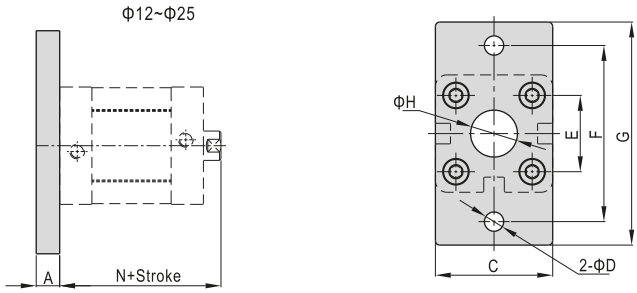

Φ32~Φ125

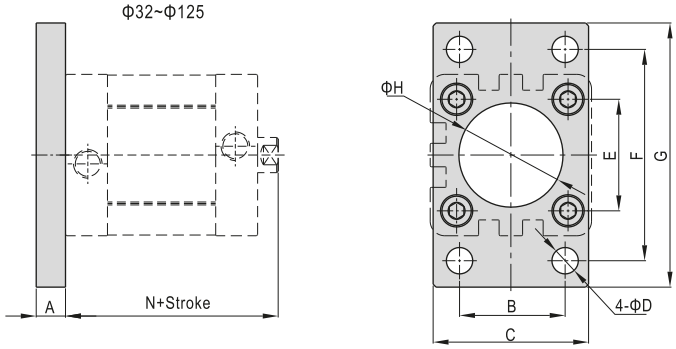

Bore size\Item	A	B	C	D	E	F	G	H	N
12	8	-	25	5.5	16	40	55	10	40
16	8	-	30	5.5	18	43	55	10	40
20	8	-	35	6.6	22	55	68	16	43
25	8	-	39.5	6.6	26	60	76	16	45
32	10	32	47	7	32.5	64	80	30.5	51
40	10	36	53	9	38	72	90	35.5	52.5
50	12	45	65	9	46.5	90	108	40.5	53.5
63	12	50	75	9	56.5	100	118	45.5	57
80	16	63	95	12.5	72	126	150	45.5	63
100	16	75	115	14.5	89	150	176	55.5	76
125	20	90	139	16.5	110	180	218	60.5	92

CA

Φ12~Φ25

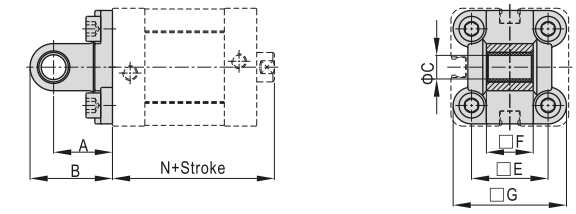

Φ32~Φ125

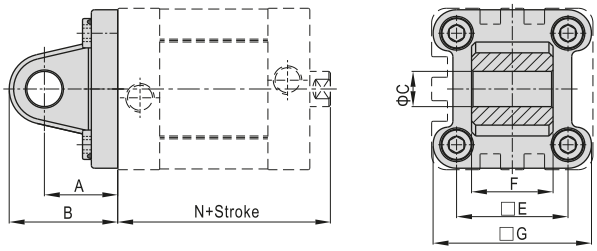

Bore size\Item	A	B	C	E	F	G	N
12	16	22	6	16	11.9	24	40
16	16	22	6	18	11.9	28.5	40
20	20	28	8	22	15.9	34.5	43
25	20	28	8	26	15.9	38.5	45
32	22	32.5	10	32.5	25.8	46.5	51
40	25	37	12	38	27.8	54	52.5
50	27	39	12	46.5	31.7	64	53.5
63	32	47	16	56.5	39.7	75	57
80	36	51.5	16	72	49.7	93	63
100	41	61	20	89	59.7	110	76
125	50	74	25	110	69.7	134	92

SDB

Φ12~Φ25

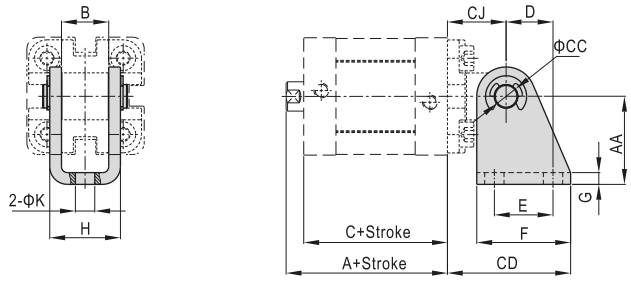

Bore size\Item	A	AA	B	C	CC	CD	CJ	D	E	F	G	H	K
12	40	27	12.1	35	6	34	16	13	15	25	3	18.1	5.5
16	40	27	12.1	35	6	34	16	13	15	25	3	18.1	5.5
20	43	30	16.1	37	8	42	20	16	20	32	4	24.1	6.6
25	45	30	16.1	39	8	42	20	16	20	32	4	24.1	6.6

Note) SDB cann't be used alone, it must be used with CA.

CB

Φ32~Φ125

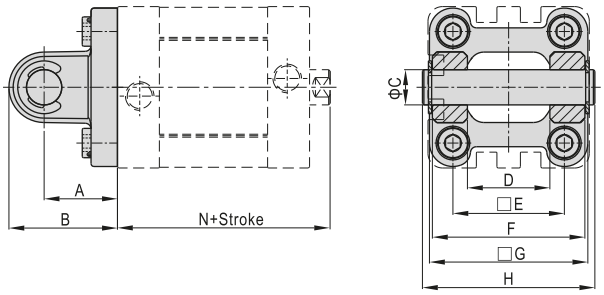

Bore size\Item	A	B	C	D	E	F	G	H	N
32	22	32.5	10	26	32.5	45	46.5	51	51
40	25	37	12	28	38	52	54	59	52.5
50	27	39	12	32	46.5	60	64	67	53.5
63	32	47	16	40	56.5	70	75	77	57
80	36	51.5	16	50	72	90	93	97	63
100	41	61	20	60	89	110	110	119	76
125	50	74	25	70	110	130	134	139	92

CR

Φ32~Φ125

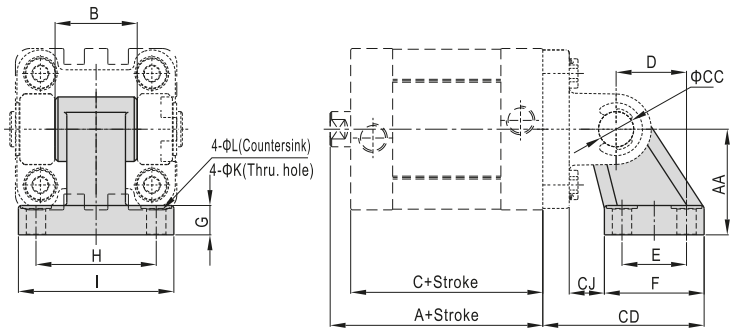

Bore size\Item	A	AA	B	C	CC	CD	CJ	D	E	F	G	H	I	K	L
32	51	32	26	44	10	50	10	21	18	31	8	38	51	6.6	11
40	52.5	36	28	45.5	12	56	12	24	22	35	10	41	54	6.6	11
50	53.5	45	32	45.5	12	68	13	33	30	45	12	50	65	9	14
63	57	50	40	49	16	77	17	37	35	50	12	52	67	9	14
80	63	63	50	54	16	93	19	47	40	60	14	66	86	11	17
100	76	71	60	67	20	106	22	55	50	70	15	76	96	11	17
125	92	90	70	81	25	135	26	70	60	90	20	94	124	14	20

Note) CR cann't be used alone, it must be used with CB.

FTC

Φ32~Φ125

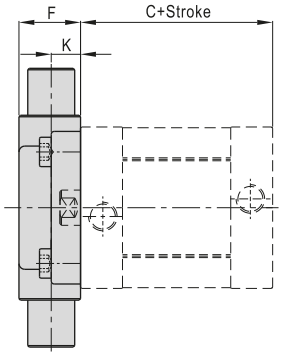

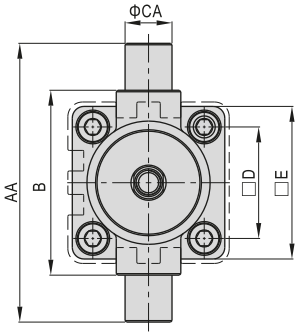

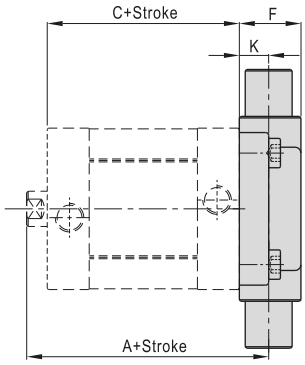

Bore size\Item	A	AA	B	C	CA
32	63	74	50	44	12
40	66.5	95	63	45.5	16
50	71.5	107	75	45.5	16
63	77	130	90	49	20
80	85	150	110	54	20
100	102	185	132	67	25
125	124	210	160	81	25

Bore size\Item	D	E	F	K
32	32.5	46	19	10
40	38	52	21	10
50	46.5	64	26	12
63	56.5	74	28	12
80	72	94	31	16
100	89	114	35	16
125	110	139	43	20

TCM2

Φ32~Φ125

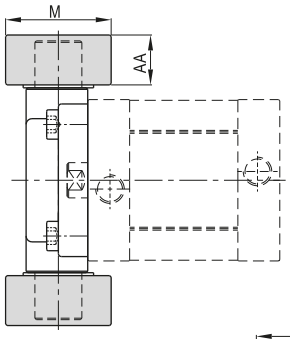

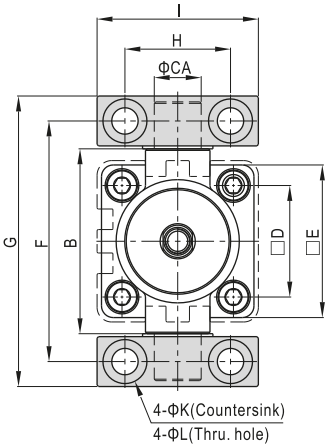

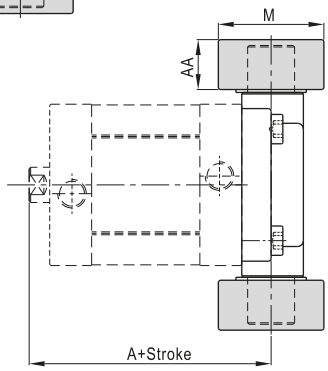

Bore size\Item	A	AA	B	CA	D	E	F	G	H	I	K	L	M
32	63	14	52	12	32.5	46	66	80	32	46	11	7	30
40	66.5	17	65	16	38	52	82	99	36	55	15	9	36
50	71.5	17	75	16	46.5	64	94	111	36	55	15	9	36
63	77	20.5	90	20	56.5	74	113.5	134	42	65	18	11	40
80	85	20.5	112	20	72	94	133.5	154	42	65	18	11	40
100	102	24.5	135	25	89	114	159.5	184	50	75	20	14	50
125	124	24.5	170	25	110	139	187.5	212	50	75	20	14	50

Note) TCM2 cann't be used alone, it must be used with FTC.
The installation position of the accessories can not be adjusted arbitrarily.

I knockle

F-ACQ12I

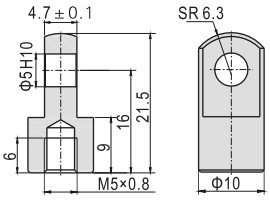

Note) Other I knockles are common parts .Please refer to P377 for knuckle detail,

Y knockle

F-ACQ12Y

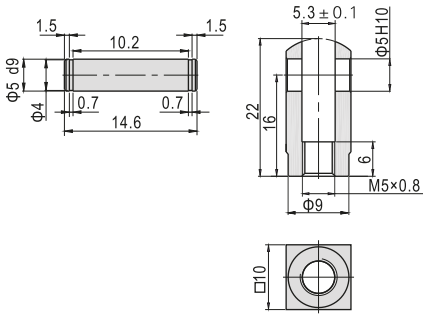

Note) Other Y knockles are common parts .Please refer to P378 for knuckle detail,

List for ordering code of accessories

Accessoriies / Bore size	Mounting accessory			
	LB	FA/FB	CA	CB
12	F-ACE12LB	F-ACE12FA	F-ACE12CA	-
16	F-ACP12LB	F-ACE16FA	F-ACE16CA	-
20	F-ACP20LB	F-ACE20FA	F-ACE20CA	-
25	F-ACP25LB	F-ACE25FA	F-ACE25CA	-
32	F-ACE32LB	F-SI32FA	F-SE32CA	F-SE32CB
40	F-ACE40LB	F-SI40FA	F-SE40CA	F-SE40CB
50	F-ACE50LB	F-SI50FA	F-SE50CA	F-SE50CB
63	F-ACE63LB	F-SI63FA	F-SE63CA	F-SE63CB
80	F-ACE80LB	F-SI80FA	F-SE80CA	F-SE80CB
100	F-ACE100LB	F-SI100FA	F-SE100CA	F-SE100CB
125	-	F-SI125FA	F-SE125CA	F-SE125CB

Accessoriies / Bore size	Mounting accessory			
	CR	SDB	FTC	TCM2
12	-	F-MI12SDB	-	-
16	-	F-MI12SDB	-	-
20	-	F-MI20SDB	-	-
25	-	F-MI20SDB	-	-
32	F-SI32CR	-	F-SI32FTC	F-SI32TCM2
40	F-SI40CR	-	F-SI40FTC	F-SI40TCM2
50	F-SI50CR	-	F-SI50FTC	F-SI40TCM2
63	F-SI63CR	-	F-SI63FTC	F-SI63TCM2
80	F-SI80CR	-	F-SI80FTC	F-SI63TCM2
100	F-SI100CR	-	F-SI100FTC	F-SI125TCM2
125	F-SI125CR	-	F-SI125FTC	F-SI125TCM2

Accessoriies / Bore size	Knuckle			
	I: I Knuckle	Y: Y Knuckle	F: F Knuckle	U: U Knuckle
12	F-ACQ12I	F-ACQ12Y	F-M5X080F	F-M5X080U
16	F-M6X100I	F-M6X100Y	F-M6X100F	F-M6X100U
20	F-M8X125I	F-M8X125Y	F-M8X125F	F-M8X125U
25				
32	F-M10X125I	F-M10X125Y	F-M10X125F	F-M10X125U
40				
50	F-M12X125I	F-M12X125Y	F-M12X125F	F-M12X125U
63				
80	F-M16X150I	F-M16X150Y	F-M16X150F	F-M16X150U
100				
125	F-M20X150I	F-M20X150Y	F-M20X150F	F-M20X150U

Accessoriies / Bore size	Sensor switch	
	CS1–E	DS1–E
12~125	CS1-E	DS1-E