Shock and Vibration Products

ITT

ENGINEERED FOR LIFE

ENIDINE

ITT Enidine provides quality energy absorption and vibration isolation products and services to a variety of heavy industries throughout the globe. These industries include; steel and aluminum rolling mills, manufacturers of mill equipment, gantry cranes, ship to shore cranes, overhead bridge crane manufacturers and automated stacker cranes. ITT is a diversified leading manufacturer of highly engineered critical components and customized technology solutions for growing industrial end-markets in energy, infrastructure, automation and heavy industries.

Building on its heritage of innovation, ITT partners with its customers to deliver enduring solutions to the key industries that underpin our modern way of life. Founded in 1920, ITT is headquartered in White Plains, NY, with employees in more than fifteen countries and sales in more than 125 countries.

As part of our strategy to make the customer central to everything we do, our core technologies, engineering strength and global scale offers greater value for customers in terms of quality, cost and delivery.

Industry Leading Quality and Value – On Time, Every Time

Table of Contents
Product Selection

Company Overview . . . 1
New Technologies and Enhancements . . . 2
Theory of Energy Absorption . . . 3-4
Sizing Examples . . . 5-16
Quick Selection Guide . . . 17-18

General

Shock Absorber Products

ECO OEM/OEMXT Series (Adjustable Shock Absorbers)
Overview . . . 19-20
Technical Data and Accessories . . . 21-34
Adjustment Techniques/Typical Applications . . . 35-36

ECO/OEM/XT

TK/STH Series (Non-Adjustable Shock Absorbers)
Overview . . . 37-38
Technical Data, Accessories and Sizing Curves . . . 39-43
Typical Applications . . . 44

TK/STH

ECO Series (Non-Adjustable Shock Absorbers)
Overview . . . 45-46
ECO Technical Data, Accessories and Sizing Curves . . . 47-55
Typical Applications . . . 56

ECO

PMXT Series (Non-Adjustable Shock Absorbers)
Overview . . . 57-58
Technical Data, Accessories and Sizing Curves . . . 59-63
Typical Applications . . . 64

PMXT

HDN/HD/HDA Series (Heavy Duty Shock Absorbers)
HDN Overview . . . 65
HDN Technical Data . . . 66-70
HDA/Adjustment Techniques . . . 71-72
HD Overview . . . 73
HD Technical Data, Accessories . . . 74-77
Configuration Worksheet . . . 78

HDN/HD/HDA

HI Series (Heavy Industry Buffers)
Overview/Ordering Information . . . 79-80
Technical Data, Accessories . . . 81-82

HI

Jarret Series
Overview/Visco-elastic Technology . . . 83-84
Technical Data/Application Worksheets . . . 85-92

JT

Rate Control Products

Rate Controls
Overview . . . 93-95
Adjustment Techniques/Typical Applications . . . 96-98
ADA Technical Data, Accessories . . . 101-102
DA Technical Data, Accessories . . . 103-104

ADA/DA

Vibration Isolation Products

Wire Rope Isolators
Overview/Typical Applications . . . 105-106
Ordering Information/Application Worksheet . . . 107-108
WR Technical Data . . . 109-136

WR

Compact Wire Rope Isolators
Overview/Typical Applications . . . 137-139
Ordering Information/Application Worksheet . . . 140
CR Technical Data . . . 141-152

CR

Engineered Products

HERM (High Energy Rope Mounts)
Overview/Typical Applications . . . 153-155
Application Worksheet . . . 156
HERM Technical Data . . . 157-172

HERM

Custom Products . . . 173-174
Application Worksheet . . . 175

Overview

With its world headquarters located in Orchard Park, New York, USA, **ITT ENIDINE Inc.** is a world leader in the design and manufacture of standard and custom energy absorption and vibration isolation product solutions within the Industrial, Aerospace, Defense, Marine and Rail markets. Product ranges include shock absorbers, gas springs, rate controls, air springs, wire rope isolators, heavy industry buffers and emergency stops. With facilities strategically located throughout the world and in partnership with our vast global network of distributors, ITT Enidine continues to strengthen its presence within marketplace.

Founded in 1966, ITT Enidine now has close to 400 employees located throughout the globe in the United States, Germany, France, Japan and China. With a team of professionals in engineering, computer science, manufacturing, production and marketing our employees provide our customers the very best in service and application solutions.

"ITT Enidine Inc. is widely recognized as the preferred source for energy absorption and vibration isolation products."

From Original Equipment Manufacturers (OEM) to aftermarket applications, ITT Enidine offers a unique combination of product selection, engineering excellence and technical support to meet even the toughest energy absorption application requirements.

Global Manufacturing and Sales Facilities offer our customers:

- ***Highly Trained Distribution Network***
- ***State-of-the Art Engineering Capabilities***
- ***Custom Solution Development***
- ***Customer Service Specialists***
- ***Multiple Open Communication Channels***

If you are unsure whether one of our standard products meets your requirements, feel free to speak with one of our technical representatives at **+49 6063 9314 0**, or contact us via e-mail at **info@enidine.eu**.

Products/Engineering/Technical Support

ITT Enidine continually strives to provide the widest selection of shock absorbers and rate control products in the global marketplace. Through constant evaluation and testing, we bring our customers the most cost effective products with more features, greater performance and improved ease of use.

New Products and Services

ITT Enidine engineers continue to monitor and influence trends in the motion control industry, allowing us to remain at the forefront of new energy absorption and vibration isolation product development.

Our experienced engineering team has designed custom solutions for a wide variety of challenging applications, including automated warehousing systems and shock absorbers for hostile industrial environments such as glass manufacturing, among others. These custom application solutions have proven to be critical to our customers' success. Let ITT Enidine engineers do the same for you.

Custom designs are not an exception at ITT Enidine, they are an integral part of our business. Should your requirements fit outside of our standard product range, ITT Enidine engineers can assist in developing special finishes, components, hybrid technologies and new designs to ensure a "best-fit" product solution customized to your exact specifications.

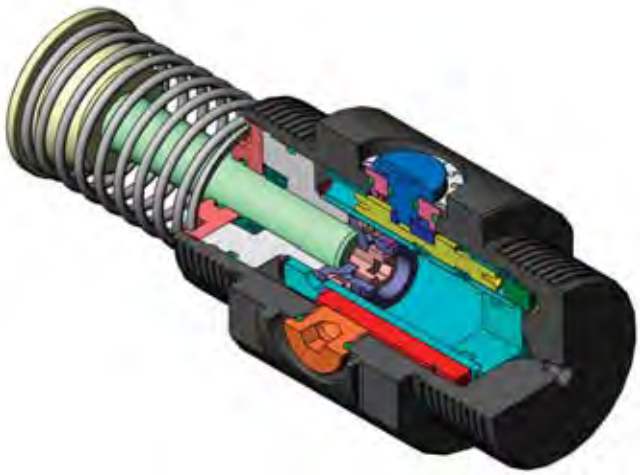

A talented engineering staff works to design and maintain the most efficient energy absorption product lines available today, using the latest engineering tools:

- ***3-D CAD Solid Modeling***
- ***3-D Soluble Prototype Printing Capabilities***
- ***Finite Element Analysis***
- ***Complete Product Verification Testing Facility***

New product designs get to market fast because they can be fully developed in virtual environments before a prototype is ever built. This saves time and lets us optimize the best solution using real performance criteria.

Global Service and Support

ITT Enidine offers its customers a global network of customer service staff technical sales personnel that are available to assist you with all of your application needs.

- Operating with lean manufacturing and cellular production, ITT Enidine produces higher quality custom and standard products with greater efficiency and within shorter lead times.
- An authorized Global Distribution Network is trained regularly by the ITT Enidine staff on new products and services ensuring they are better able to serve you.
- **New Enisize Sizing Portal provides our customers with the necessary sizing and design tools. www.enisize.com**
- Global operations in United States, Germany, France, China and Japan.
- A comprehensive, website full of application information, technical data, sizing examples and information to assist in selecting the product that's right for you.

Our website also features a searchable worldwide distributor lookup to help facilitate fast, localized service. Contact us today for assistance with all of your application needs.

Our global customer service and technical sales departments are available to assist you find the solution that's right for your application needs. Call us at +49 6063 9314 0 or e-mail us at info@enidine.eu and let us get started today.

Theory of Energy Absorption
ITT Enidine

Overview

As companies strive to increase productivity by operating machinery at higher speeds, often the results are increased noise, damage to machinery/products, and excessive vibration. At the same time, safety and machine reliability are decreased. A variety of products are commonly used to solve these problems. However, they vary greatly in effectiveness and operation. Typical products used include rubber bumpers, springs, cylinder cushions and shock absorbers. The following illustrations compare how the most common products perform:

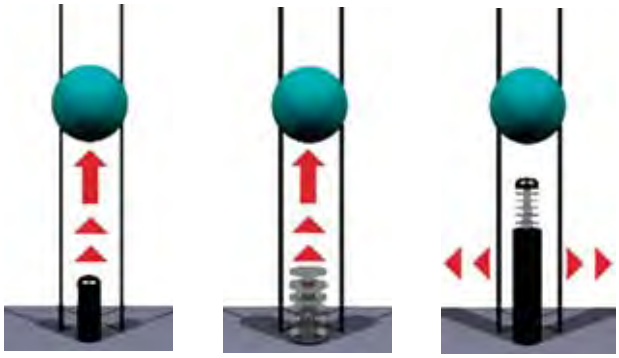

Rubber Bumper | **Metal Spring** | **ITT Enidine Shock Absorber**

All moving objects possess kinetic energy. The amount of energy is dependent upon weight and velocity. A mechanical device that produces forces diametrically opposed to the direction of motion must be used to bring a moving object to rest.

Rubber bumpers and springs, although very inexpensive, have an undesirable recoil effect. Most of the energy absorbed by these at impact is actually stored. This stored energy is returned to the load, producing rebound and the potential for damage to the load or machinery. Rubber bumpers and springs initially provide low resisting force which increases with the stroke.

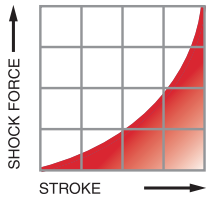

Cylinder cushions are limited in their range of operation. Most often they are not capable of absorbing energy generated by the system. by design, cushions have a relatively short stroke and operate at low pressures resulting in very low energy absorption. The remaining energy is transferred to the system, causing shock loading and vibration.

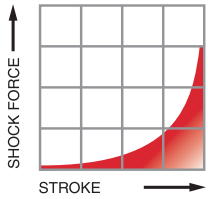

Shock absorbers provide controlled, predictable deceleration. These products work by converting kinetic energy to thermal energy. More specifically, motion applied to the piston of a hydraulic shock absorber pressurizes the fluid and forces it to flow through restricting orifices, causing the fluid to heat rapidly. The thermal energy is then transferred to the cylinder body and harmlessly dissipated to the atmosphere.

The advantages of using shock absorbers include:

1. Longer Machine Life – The use of shock absorbers significantly reduces shock and vibration to machinery. This eliminates machinery damage, reduces downtime and maintenance costs, while increasing machine life.

2. Higher Operating Speeds – Machines can be operated at higher speeds because shock absorbers control or gently stop moving objects. Therefore, production rates can be increased.

3. Improved Production Quality – Harmful side effects of motion, such as noise, vibration and damaging impacts, are moderated or eliminated so the quality of production is improved. Therefore, tolerances and fits are easier to maintain.

4. Safer Machinery Operation – Shock absorbers protect machinery and equipment operators by offering predictable, reliable and controlled deceleration. They can also be designed to meet specified safety standards, when required.

5. Competitive Advantage – Machines become more valuable because of increased productivity, longer life, lower maintenance costs and safer operation.

Automotive vs. Industrial Shock Absorbers

It is important to understand the differences that exist between the standard automotive-style shock absorber and the industrial shock absorber.

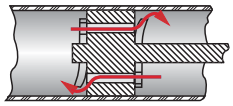

DEFLECTIVE BEAM ORIFICE

The automotive style employs the deflective beam and washer method of orificing. Industrial shock absorbers utilize single orifice, multi-orifice and metering pin configurations. The automotive type maintains a damping force which varies in direct proportion to the velocity of the piston, while the damping force in the industrial type varies in proportion to the square of the piston velocity. In addition, the damping force of the automotive type is independent of the stroke position while the damping force associated with the industrial type can be designed either dependent or independent of stroke position.

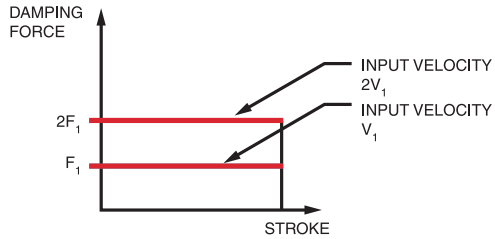

AUTOMOTIVE TYPE SHOCK ABSORBER

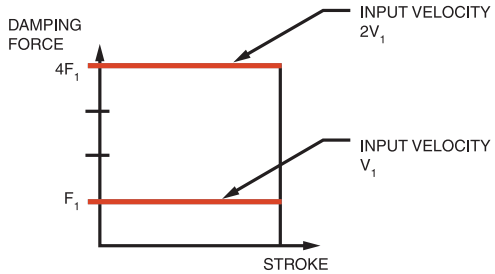

INDUSTRIAL TYPE SHOCK ABSORBER

ITT ENGINEERED FOR LIFE
www.enidine.eu Email: info@enidine.eu Tel.: +49 6063 9314 0 Fax: +49 6063 9314 44

Equally as important, automotive-style shock absorbers are designed to absorb only a specific amount of input energy. This means that, for any given geometric size of automotive shock absorber, it will have a limited amount of absorption capability compared to the industrial type.

This is explained by observing the structural design of the automotive type and the lower strength of materials commonly used. These materials can withstand the lower pressures commonly found in this type. The industrial shock absorber uses higher strength materials, enabling it to function at higher damping forces.

Adjustment Techniques

A properly adjusted shock absorber safely dissipates energy, reducing damaging shock loads and noise levels. For optimum adjustment setting see useable adjustment setting graphs. Watching and "listening" to a shock absorber as it functions aids in proper adjustment.

To correctly adjust a shock absorber, set the adjustment knob at zero (0) prior to system engagement. Cycle the mechanism and observe deceleration of the system.

If damping appears too soft (unit strokes with no visual deceleration and bangs at end of stroke), move indicator to next largest number. Adjustments must be made in gradual increments to avoid internal damage to the unit (e.g., adjust from 0 to 1, not 0 to 4).

Increase adjustment setting until smooth deceleration or control is achieved and negligible noise is heard when the system starts either to decelerate or comes to rest.

When abrupt deceleration occurs at the beginning of the stroke (banging at impact), the adjustment setting must be moved to a lower number to allow smooth deceleration.

If the shock absorber adjustment knob is set at the high end of the adjustment scale and abrupt deceleration occurs at the end of the stroke, a larger unit may be required.

Shock Absorber Performance When Weight or Impact Velocity Vary

When conditions change from the original calculated data or actual input, a shock absorber's performance can be greatly affected, causing failure or degradation of performance. Variations in input conditions after a shock absorber has been installed can cause internal damage, or at the very least, can result in unwanted damping performance. Variations in weight or impact velocity can be seen by examining the following energy curves:

Varying Impact Weight: Increasing the impact weight (impact velocity remains unchanged), without reorificing or readjustment will result in increased damping force at the end of the stroke. Figure 1 depicts this undesirable bottoming peak force. This force is then transferred to the mounting structure and impacting load.

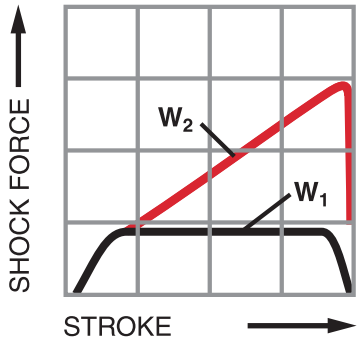

Figure 1

Varying Impact Velocity: Increasing impact velocity (weight remains the same) results in a radical change in the resultant shock force. Shock absorbers are velocity conscious products; therefore, the critical relationship to impact velocity must be carefully monitored. Figure 2 depicts the substantial change in shock force that occurs when the velocity is increased. Variations from original design data or errors in original data may cause damage to mounting structures and systems, or result in shock absorber failure if the shock force limits are exceeded.

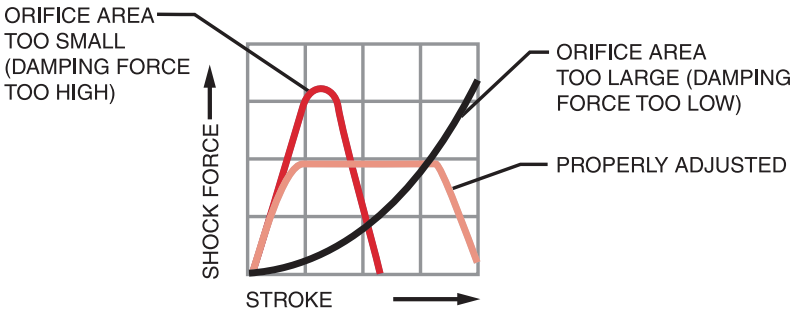

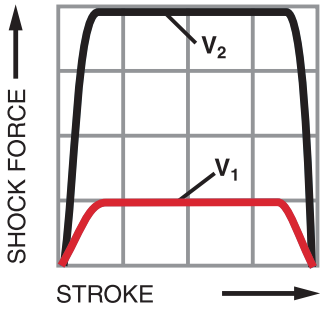

Figure 2

Shock Absorber Sizing Examples
Typical Shock Absorber Applications

SHOCK ABSORBER SIZING

Follow the next six steps to manually size ITT Enidine shock absorbers:

STEP 1: Identify the following parameters. These must be known for all energy absorption calculations. Variations or additional information may be required in some cases.

A. Weight of the load to be stopped (Kg).
B. Velocity of the load upon impact with the shock absorber (m/s).
C. External (propelling) forces acting on the load (N), if any.
D. Cyclic frequency at which the shock absorber will operate.
E. Orientation of the application's motion (i.e. horizontal, vertical up, vertical down, inclined, rotary horizontal, rotary vertical up, rotary vertical down).

NOTE: For rotary applications, it is necessary to determine both the radius of gyration (K) and the mass moment of inertia (I). both of these terms locate the mass of a rotating object with respect to the pivot point. It is also necessary to determine the angular velocity (ω) and the torque (T).

STEP 2: Calculate the kinetic energy of the moving object.

$$E_K = \frac{I}{2}\omega^2 \quad \text{(rotary) or} \quad E_K = \frac{1}{2}MV^2 \text{ (linear)}$$

Utilizing the Product Locators for Shock Absorbers located at the beginning of each product family section, select a model, either adjustable or non-adjustable, with a greater energy per cycle capacity than the value just calculated.

STEP 3: Calculate the work energy input from any external (propelling) forces acting on the load, using the stroke of the model selected in Step 2.

$$E_W = F_D \times S \text{ (linear) or } E_W = \frac{T}{R_S} \times S \text{ (rotary)}$$

Caution: The propelling force must not exceed the maximum propelling force listed for the model chosen. If the propelling force is too high, select a larger model and recalculate the work energy.

STEP 4: Calculate the total energy per cycle $E_T = E_K + E_W$

The model selected must have at least this much energy capacity. If not, select a model with greater energy capacity and return to Step 3.

STEP 5: Calculate the energy that must be absorbed per hour. Even though the shock absorber can absorb the energy in a single impact, it may not be able to dissipate the heat generated if the cycle rate is too high.

$$E_TC = E_T \times C$$

The model selected must have an energy per hour capacity greater than this calculated figure. If it is not greater, there are two options:

1. Choose another model that has more energy per hour capacity (because of larger diameter or stroke). Keep in mind that if the stroke changes, you must return to Step 3.
2. Use an Air/Oil Tank. The increased surface area of the tank and piping will increase the energy per hour capacity by 20 percent.

STEP 6: If you have selected an TK or ECO Series model, refer to the sizing graph(s) in the appropriate series section to determine the required damping constant. If the point cannot be found in the sizing graph, you must select a larger model or choose a different series. Note that if the stroke changes, you must return to Step 3.

If you have selected an adjustable model (OEM or HDA Series), refer to the Useable Adjustment Setting Range graph for the chosen model. The impact velocity must fall within the limits shown on the graph.

RATE CONTROL SIZING

Follow the next five steps to manually size ITT Enidine rate controls:

STEP 1: Identify the following parameters. These must be known for all rate control calculations. Variations or additional information may be required in some cases.

A. Weight of the load to be controlled Kg
B. Desired velocity of the load m/s
C. External (propelling) force acting on the load N, if any.
D. Cyclic frequency at which the rate control will operate.
E. Orientation of the application's motion (i.e. horizontal, vertical up, vertical down, inclined, rotary horizontal, rotary vertical up, rotary vertical down.)
F. Damping direction (i.e., tension [T], compression [C] or both [T and C].
G. Required stroke mm

NOTE: For rotary applications, please submit the application worksheet on page 175 to ITT Enidine for sizing.

STEP 2: Calculate the propelling force at the rate control in each direction damping is required. (See sizing examples on page 6-15).

CAUTION: The propelling force in each direction must not exceed the maximum propelling force listed for the chosen model. If the propelling force is too high, select a larger model.

STEP 3: Calculate the total energy per cycle

$$E_T = E_W \text{ (tension)} + E_W \text{ (compression)}$$
$$E_W = F_D \times S$$

STEP 4: Calculate the total energy per hour

$$E_TC = E_T \times C$$

The model selected must have an energy per hour capacity greater than this calculated figure. If not, choose a model with a higher energy per hour capacity.

Compare the damping direction, stroke, propelling force, and total energy per hour to the values listed in the Rate Controls Engineering Data Charts (pages 99-104).

STEP 5: If you have selected a rate control, refer to the sizing graphs in the Rate Controls section to determine the required damping constant.

If you have selected an adjustable model (ADA), refer to the Useable Adjustment Setting Range graph for the chosen model. The desired velocity must fall within the limits shown on the graph.

ITT ENGINEERED FOR LIFE
www.enidine.eu Email: info@enidine.eu Tel.: +49 6063 9314 0 Fax: +49 6063 9314 44

SYMBOLS

a = Acceleration (m/s^2)
A = Width (m)
B = Thickness (m)
C = Number of cycles per hour
d = Cylinder bore diameter (mm)
D = Distance (m)
E_K = Kinetic energy (Nm)
E_T = Total energy per cycle (Nm/c), $E_K + E_W$
E_TC = Total energy to be absorbed per hour (Nm/hr)
E_W = Work or drive energy (Nm)
F_D = Propelling force (N)
F_P = Shock force (N)
H = Height (m)
Hp = Motor rating (kw)
I = Mass moment of inertia (kgm^2)
K = Radius of gyration (m)
L = Length (m)
P = Operating pressure (bar)
R_S = Mounting distance from pivot point (m)
S = Stroke of shock absorber (m)
t = Time (s)
T = Torque (Nm)
V = Impact velocity (m/s)
M = Mass (kg)
α = Angle of incline (degrees)
θ = Start point from true vertical 0° (degrees)
μ = Coefficient of friction
Ø = Angle of rotation (degrees)
ω = Angular velocity (rad/s)

USEFUL FORMULAS

1. To Determine Reaction Force

$$F_P = \frac{E_T}{S \times \mathbf{.85}}$$

For Non-Adjustable ECO Series only, use

$$F_P = \frac{E_T}{S \times \mathbf{.50}}$$

2. To Determine Impact Velocity

A. If there is no acceleration (V is constant) (e.g., load being pushed by hydraulic cylinder or motor driven.) $V = \frac{D}{t}$

B. If there is acceleration. (e.g., load being pushed by air cylinder) $V = \frac{\mathbf{2} \times D}{t}$

3. To Determine Propelling Force Generated by Electric Motor

$$F_D = \frac{\mathbf{3000} \times kw}{V}$$

4. To Determine Propelling Force of Pneumatic or Hydraulic Cylinders

$F_D = 0,\mathbf{0785} \times d^2 \times P$

5. Free Fall Applications

A. Find Velocity for a Free Falling Weight:
$V = \sqrt{19,6 \times H}$

B. Kinetic Energy of Free Falling Weight:
$E_K = \mathbf{9,8} \times M \times H$

6. Deceleration

A. To Determine the Approximate Stroke

$$a = \frac{F_P - F_D}{M}$$

B. To Determine the Approximate Stroke (Conventional Damping Only)

$$S = \frac{E_K}{a \times M\ 0,85 - 0,15\ F_D}$$

*For ECO and TK Models:

$$S = \frac{E_K}{a \times M\ 0,5 - 0,5\ F_D}$$

NOTE: Constants are printed in **bold**.

The following examples are shown using Metric formulas and units of measure.

Shock Absorbers

EXAMPLE 1:
Vertical Free Falling Weight

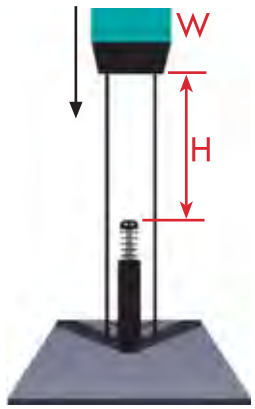

STEP 1: Application Data
(M) Mass = 1 550 kg
(H) Height = 0,5 m
(C) Cycles/Hr = 2

STEP 2: Calculate kinetic energy
E_K = **9,8** x M x H
E_K = **9,8** x 1 550 x 0,5
E_K = 7 595 Nm

Assume Model OEM 4.0M x 6 is adequate (Page 31).

STEP 3: Calculate work energy
E_W = **9,8** M x S
E_W = **9,8** x 1 550 x 0,15
E_W = 2 278,5 Nm

STEP 4: Calculate total energy per cycle
E_T = $E_K + E_W$
E_T = 7 595 + 2 278,5
E_T = 9 873,5 Nm/c

STEP 5: Calculate total energy per hour
E_TC = E_T x C
E_TC = 9 873,5 x 2
E_TC = 19 747 Nm/hr

STEP 6: Calculate impact velocity and confirm selection
V = $\sqrt{\mathbf{19,6} \times H}$
V = $\sqrt{\mathbf{19,6} \times \mathbf{0,5}}$
V = 3,1 m/s

Model OEM 4.0M x 6 is adequate for this application.

EXAMPLE 2:
Vertical Moving Load with Propelling Force Downward

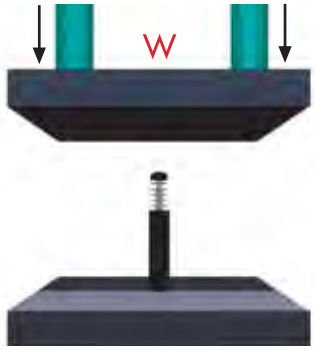

STEP 1: Application Data
(M) Mass = 1 550 kg
(V) Velocity = 2,0 m/s
(d) Cylinder bore dia. = 100mm
(P) Pressure = 5 bar
(C) Cycles/Hr = 200

STEP 2: Calculate kinetic energy

$$E_K = \frac{M}{2} \times V^2 = \frac{1\ 550}{2} \times 2^2$$

E_K = 3 100 Nm

Assume Model OEM 4.0M x 4 is adequate (Page 31).

STEP 3: Calculate work energy
F_D = [**0,0785** x d^2 x P] + [**9,8** x M]
F_D = [**0,0785** x 100^2 x 5] + [**9,8** x 1 550]
F_D = 19 117 N
E_W = F_D x S
E_W = 19 117 x 0,1
E_W = 1 911,7 Nm

STEP 4: Calculate total energy per cycle
E_T = $E_K + E_W$
E_T = 3 100 + 1 911,7
E_T = 5 011,7 Nm/c

STEP 5: Calculate total energy per hour
E_TC = E_T x C
E_TC = 5 011,7 x 200
E_TC = 1 002 340 Nm/hr

Model OEM 4.0M x 4 is adequate.

Shock Absorber Sizing Examples
Typical Shock Absorber Applications

EXAMPLE 3:
Vertical Moving Load with Propelling Force Upward

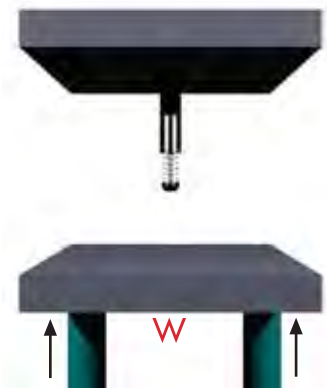

STEP 1: Application Data
(M) Mass = 1 550 kg
(V) Velocity = 2 m/s
(d) 2 Cylinders bore dia. = 150mm
(P) Operating pressure = 5 bar
(C) Cycles/Hr = 200

STEP 2: Calculate kinetic energy

$$E_K = \frac{M}{2} \times V^2 = \frac{1\,550}{2} \times 2^2$$

E_K = 3 100 Nm

Assume Model OEM 3.0M x 5 is adequate (Page 31).

STEP 3: Calculate work energy

F_D = 2 x [**0,0785** x d^2 x P] – [**9,8** x M]
F_D = 2 x [**0,0785** x 150^2 x 5] – [**9,8** x 1 550]
F_D = 2 472,5 N
E_W = F_D X S
E_W = 2 472,5 x 0,125
E_W = 309 Nm

STEP 4: Calculate total energy per cycle
E_T = E_K + E_W
E_T = 3 100 + 309
E_T = 3 409 Nm/c

STEP 5: Calculate total energy per hour
E_TC = E_T x C
E_TC = 3 409 x 200
E_TC = 681 800 Nm/hr

Model OEM 3.0M x 5 is adequate.

EXAMPLE 4:
Vertical Moving Load with Propelling Force from Motor

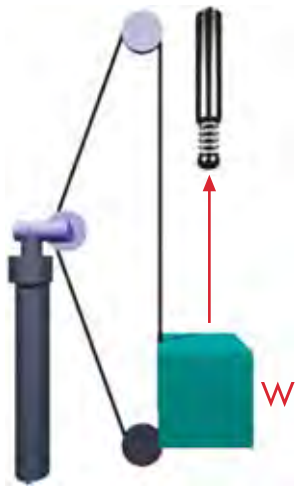

STEP 1: Application Data
(M) Mass = 90 kg
(V) Velocity = 1,5 m/s
(kW) Motor rating = 1 kW
(C) Cycles/Hr = 100

STEP 2: Calculate kinetic energy

$$E_K = \frac{M}{2} \times V^2 = \frac{90}{2} \times 1{,}5^2$$

E_K = 101 Nm

CASE A: UP
STEP 3: Calculate work energy

$$F_D = \frac{\mathbf{3\,000} \times kW}{V} - \mathbf{9{,}8} \times M$$

$$F_D = \frac{\mathbf{3\,000} \times 1}{1{,}5} - 882$$

F_D = 1 118 N

Assume Model OEM 1.25 x 2 is adequate (Page 26).

E_W = F_D X S
E_W = 1 118 x 0, 5
E_W = 56 Nm

STEP 4: Calculate total energy per cycle
E_T = E_K + E_W
E_T = 101 + 56
E_T = 157 Nm/c

STEP 5: Calculate total energy per hour
E_TC = E_T x C
E_TC = 157 x 100
E_TC = 15 700 Nm/hr

Model OEM 1.25M x 2 is adequate.

CASE B: DOWN
STEP 3: Calculate work energy

$$F_D = \frac{\mathbf{3\,000} \times kW}{V} + \mathbf{9{,}8} \times M$$

$$F_D = \frac{\mathbf{3\,000} \times 1}{1{,}5} + 882$$

F_D = 2 882 N

Assume Model OEMXT 2.0M x 2 is adequate (Page 30).
E_W = F_D x S
E_W = 2 882 x 0,05
E_W = 144 Nm

STEP 4: Calculate total energy per cycle
E_T = E_K + E_W
E_T = 101 + 144
E_T = 245 Nm/c

STEP 5: Calculate total energy per hour
E_TC = E_T x C
E_TC = 245 x 100
E_TC = 24 500 Nm/hr

Model OEMXT 2.0M x 2 is adequate.

EXAMPLE 5:
Horizontal Moving Load

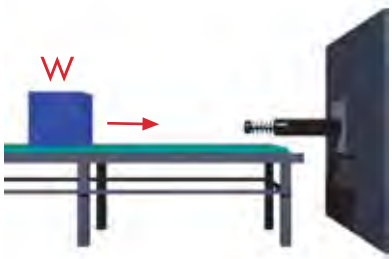

STEP 1: Application Data
(M) Mass = 900 kg
(V) Velocity = 1,5 m/s
(C) Cycles/Hr = 200

STEP 2: Calculate kinetic energy

$$E_K = \frac{M}{2} \times V^2$$

$$E_K = \frac{900}{2} \times 1{,}5^2$$

E_K = 1 012,5 Nm
Assume Model OEMXT 2.0M x 2 is adequate (Page 30).

STEP 3: Calculate work energy: N/A

STEP 4: Calculate total energy per cycle
E_T = E_K = 1 012,5 Nm/c

STEP 5: Calculate total energy per hour
E_TC = E_T x C
E_TC = 1 012,5 x 200
E_TC = 202 500 Nm/hr

Model OEMXT 2.0M x 2 is adequate.

ITT ENGINEERED FOR LIFE
www.enidine.eu Email: info@enidine.eu Tel.: +49 6063 9314 0 Fax: +49 6063 9314 44

EXAMPLE 6:
Horizontal Moving Load with Propelling Force

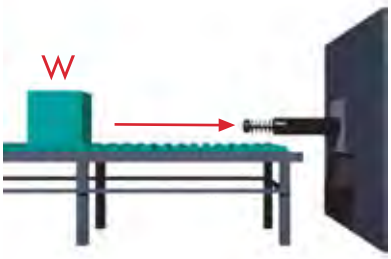

STEP 1: Application Data
(M) Mass = 900 kg
(V) Velocity = 1,5 m/s
(d) Cylinder bore dia. = 75mm
(P) Operating pressure = 5 bar
(C) Cycles/Hr = 200

STEP 2: Calculate kinetic energy

$E_K = \frac{M}{2} \times V^2$

$E_K = \frac{900}{2} \times 1{,}5^2$

$E_K = 1\,012{,}5$ Nm

Assume Model OEMXT 2.0M x 2 is adequate (Page 30).

STEP 3: Calculate work energy
$F_D = \mathbf{0{,}0785} \times d^2 \times P$
$F_D = \mathbf{0{,}0785} \times 75^2 \times 5$
$F_D = 2\,208{,}9$ N
$E_W = F_D \times S$
$E_W = 2\,208{,}9 \times 0{,}05$
$E_W = 110$ Nm/c

STEP 4: Calculate total energy per cycle
$E_T = E_K + E_W$
$E_T = 1\,012{,}5 + 110$
$E_T = 1\,122{,}5$ Nm/c

STEP 5: Calculate total energy per hour
$E_TC = E_T \times C$
$E_TC = 1\,122{,}5 \times 200$
$E_TC = 224\,500$ Nm/hr

Model OEMXT 2.0M x 2 is adequate.

EXAMPLE 7:
Horizontal Moving Load, Motor Driven

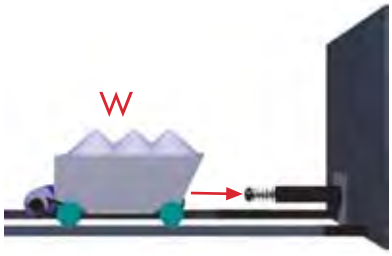

STEP 1: Application Data
(M) Mass = 1 000 kg
(V) Velocity = 1,5 m/s
(kW) Motor rating = 1 kW
(C) Cycles/Hr = 120

STEP 2: Calculate kinetic energy

$E_K = \frac{M}{2} \times V^2$

$E_K = \frac{1\,000}{2} \times 1{,}5^2$

$E_K = 1\,125$ Nm

Assume Model OEMXT 2.0M x 2 is adequate (Page 30).

STEP 3: Calculate work energy

$F_D = \frac{\mathbf{3\,000} \times kW}{V}$

$F_D = \frac{\mathbf{3\,000} \times 1}{1{,}5}$

$F_D = 2\,000$ N
$E_W = F_D \times S$
$E_W = 2\,000 \times 0{,}05$
$E_W = 100$ Nm

STEP 4: Calculate total energy per cycle
$E_T = E_K + E_W$
$E_T = 1\,125 + 100$
$E_T = 1\,225$ Nm/c

STEP 5: Calculate total energy per hour
$E_TC = E_T \times C$
$E_TC = 1\,225 \times 120$
$E_TC = 147\,000$ Nm/hr

Model OEMXT 2.0M x 2 is adequate.

EXAMPLE 8:
Free Moving Load Down an Inclined Plane

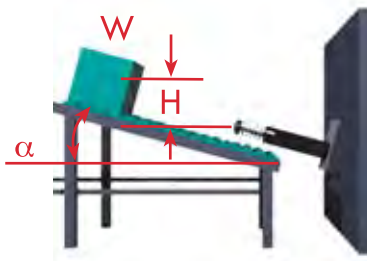

STEP 1: Application Data
(M) Mass = 250 kg
(H) Height = 0,2 m
(α) Angle of incline = 30°
(C) Cycles/Hr = 250

STEP 2: Calculate kinetic energy
$E_K = \mathbf{9{,}8} \times M \times H$
$E_K = \mathbf{9{,}8} \times 250 \times 0{,}2$
$E_K = 490$ Nm

Assume Model OEMXT 1.5M x 3 is adequate (Page 27).

STEP 3: Calculate work energy
$F_D = \mathbf{9{,}8} \times M \times \sin\alpha$
$F_D = \mathbf{9{,}8} \times 250 \times 0{,}5$
$F_D = 1\,225$ N
$E_W = F_D \times S$
$E_W = 1\,225 \times 0{,}075$
$E_W = 91{,}9$ Nm

STEP 4: Calculate total energy per cycle
$E_T = E_K + E_W$
$E_T = 490 + 91{,}9$
$E_T = 581{,}9$ Nm/c

STEP 5: Calculate total energy per hour
$E_TC = E_T \times C$
$E_TC = 581{,}9 \times 250$
$E_TC = 145\,475$ Nm/hr

STEP 6: Calculate impact velocity and confirm selection
$V = \sqrt{\mathbf{19{,}6} \times H}$
$V = \sqrt{\mathbf{19{,}6} \times 0{,}2} = 2{,}0$ m/s

Model OEMXT 1.5M x 3 is adequate.

EXAMPLE 9:
Horizontal Rotating Mass

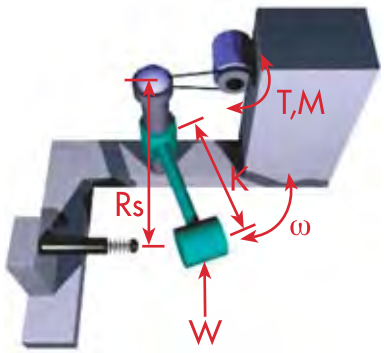

STEP 1: Application Data
(M) Mass = 90 kg
(ω) Angular velocity = 1,5 rad/s
(T) Torque = 120 Nm
(K) Radius of gyration = 0,4 m
(R_S) Mounting radius = 0,5 m
(C) Cycles/Hr = 120

STEP 2: Calculate kinetic energy

$I = M \times K^2$

$I = 90 \times 0{,}4^2$

$I = 14{,}4\ kgm^2$

$E_K = \frac{I \times \omega^2}{2}$

$E_K = \frac{14{,}4 \times 1{,}5^2}{2}$

$E_K = 16{,}2\ Nm$

Assume Model STH 0.5M is adequate (Page 41).

STEP 3: Calculate work energy

$F_D = \frac{T}{R_S}$

$F_D = \frac{120}{0{,}5}$

$F_D = 240\ N$

$E_W = F_D \times S$

$E_W = 240 \times 0{,}013$

$E_W = 3\ Nm$

STEP 4: Calculate total energy per cycle

$E_T = E_K + E_W$

$E_T = 16{,}2 + 3$

$E_T = 19{,}2\ Nm/c$

STEP 5: Calculate total energy per hour

$E_TC = E_T \times C$

$E_TC = 19{,}2 \times 120$

$E_TC = 2\ 304\ Nm/hr$

Model STH 0.5M is adequate.

EXAMPLE 10:
Horizontal Rotating Door

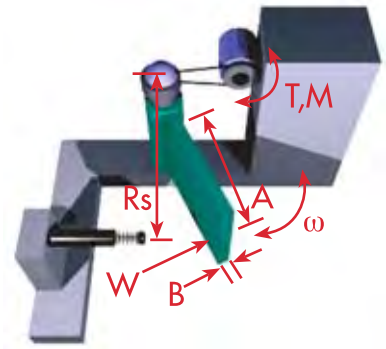

STEP 1: Application Data
(M) Mass = 25 kg
(ω) Angular velocity = 2,5 rad/s
(T) Torque = 10 Nm
(R_S) Mounting radius = 0,5 m
(A) Width = 1,0 m
(B) Thickness = 0,1 m
(C) Cycles/Hr = 250

STEP 2: Calculate kinetic energy

$K = 0{,}289 \times \sqrt{\mathbf{4} \times A^2 + B^2}$

$K = 0{,}289 \times \sqrt{\mathbf{4} \times 1{,}0^2 + 0{,}1^2}$

$K = 0{,}58\ m$

$I = M \times K^2$

$I = 25 \times 0{,}58^2$

$I = 8{,}4\ kgm^2$

$E_K = \frac{I \times \omega^2}{2}$

$E_K = \frac{8{,}4 \times 2{,}5^2}{2}$

$E_K = 26{,}3\ Nm$

Assume Model OEM .5M is adequate (Page 19).

STEP 3: Calculate work energy

$F_D = \frac{T}{R_S}$

$F_D = \frac{10}{0{,}5}$

$F_D = 20\ N$

$E_W = F_D \times S$

$E_W = 20 \times 0{,}025$

$E_W = 0{,}5\ Nm$

STEP 4: Calculate total energy per cycle

$E_T = E_K + E_W$

$E_T = 26{,}3 + 0{,}5$

$E_T = 26{,}8\ Nm/c$

STEP 5: Calculate total energy per hour

$E_TC = E_T \times C$

$E_TC = 26{,}8 \times 250$

$E_TC = 6\ 700\ Nm/hr$

STEP 6: Calculate impact velocity and confirm selection

$V = R_S \times \omega$

$V = 0{,}5 \times 2{,}5$

$V = 1{,}25\ m/s$

Model OEM 0.5M is adequate.

EXAMPLE 11:
Horizontal Moving Load, Rotary Table Motor Driven with Additional Load Installed

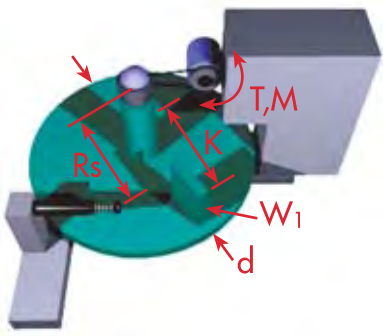

STEP 1: Application Data
(M) Mass = 200 kg
(M_1) Installed load = 50 kg
Rotational speed = 10 RPM
(T) Torque = 250 Nm
Rotary table dia. = 0,5 m
(K_{Load}) Radius of gyration = 0,2 m
(R_S) Mounting radius = 0,225 m
(C) Cycles/Hr = 1

Step 2: Calculate kinetic energy
To convert RPM to rad/s, multiply by **0,1047**

ω = RPM x **0,1047**

$\omega = 10 \times \mathbf{0{,}1047}$

$\omega = \mathbf{1{,}047}$ rad/s

$I = M \times K$

In this case, the mass moment of inertia of the table and the mass moment of inertia of the load on the table must be calculated.

K_{Table} = Table Radius x **0,707**

$K_{Table} = 0{,}25 \times \mathbf{0{,}707} = 0{,}176\ m$

$I_{Table} = M \times K^2_{Table}$

$I_{Table} = 200 \times 0{,}176^2$

$I_{Table} = 6{,}2\ kgm^2$

$I_{Load} = M_1 \times K^2_{Load}$

$I_{Load} = 50 \times (0{,}20)^2 = 2\ kgm^2$

$E_K = \frac{(I_{Table} + I_{Load}) \times \omega^2}{2}$

$E_K = \frac{(6{,}2 + 2) \times 1{,}047^2}{2}$

$E_K = 4{,}5\ Nm$

Assume model ECO 50M-4 is adequate (Page 47).

STEP 3: Calculate work energy

$F_D = \frac{T}{R_S} = \frac{250}{0{,}225} = 1\ 111{,}1\ N$

$E_W = F_D \times S = 1\ 111{,}1 \times 0{,}022$

$E_W = 24{,}4\ Nm$

STEP 4: Calculate total energy per cycle

$E_T = E_K + E_W$

$E_T = 4{,}5 + 24{,}4$

$E_T = 28{,}9\ Nm/c$

STEP 5: Calculate total energy per hour: not applicable, C=1

STEP 6: Calculate impact velocity and confirm selection

$V = R_S \times \omega$

$V = 0{,}225 \times 1{,}047$

$V = 0{,}24\ m/s$

From ECO Sizing Graph.
Model ECO 50M-4 is adequate.

EXAMPLE 12:
Vertical Motor Driven Rotating Arm with Attached Load
CASE A–Load Aided by Gravity

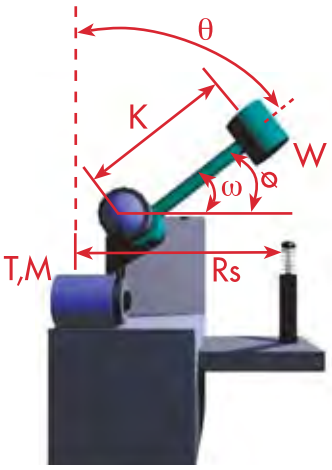

STEP 1: Application Data
(M) Mass = 50 kg
(ω) Angular velocity = 2 rad/s
(T) Torque = 350 Nm
(Ø) Angle of rotation = 30°
(K_{Load}) Radius of gyration = 0,6 m
(R_S) Mounting radius = 0,4 m
(C) Cycles/Hr = 1

STEP 2: Calculate kinetic energy
$I = M \times K^2 = 50 \times 0{,}6^2$
$I = 18\ kgm^2$
$E_K = \frac{I \times \omega^2}{2}$
$E_K = \frac{18 \times 2^2}{2}$
$E_K = 36\ Nm$

Assume Model OEM 1.0 is adequate (Page 21).

CASE A
STEP 3: Calculate work energy
$F_D = \frac{T + (9{,}8 \times M \times K \times \sin\theta)}{R_S}$
$F_D = \frac{350 + (9{,}8 \times 50 \times 0{,}6 \times 0{,}5)}{0{,}4}$
$F_D = 1\,242{,}5\ N$
$E_W = F_D \times S$
$E_W = 1\,242{,}5 \times 0{,}025$
$E_W = 31{,}1\ N$

STEP 4: Calculate total energy per cycle
$E_T = E_K + E_W$
$E_T = 36 + 31{,}1$
$E_T = 67{,}1\ Nm/c$

STEP 5: Calculate total energy per hour: not applicable, C=1

STEP 6: Calculate impact velocity and confirm selection.
$V = R_S \times \omega$
$V = 0{,}4 \times 2$
$V = 0{,}8\ m/s$

Model LROEM 1.0M is adequate. Needed for higher calculated propelling force.

EXAMPLE 13:
Vertical Motor Driven Rotating Arm with Attached Load
CASE B–Load Opposing Gravity

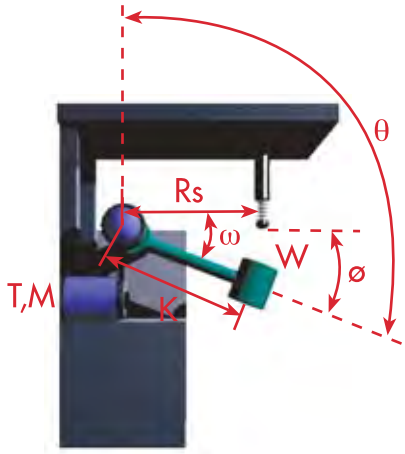

STEP 1: Application Data
(M) Mass = 50 kg
(ω) Angular velocity = 2 rad/s
(T) Torque = 350 Nm
(Ø) Angle of rotation = 30°
(K_{Load}) Radius of gyration = 0,6 m
(R_S) Mounting radius = 0,4 m
(C) Cycles/Hr = 1

STEP 2: Calculate kinetic energy
$I = M \times K^2 = 50 \times 0{,}6^2$
$I = 18\ kgm^2$
$E_K = \frac{I \times \omega^2}{2}$
$E_K = \frac{18 \times 2^2}{2}$
$E_K = 36\ Nm$

Assume Model OEM 1.0M is adequate (Page 21).

CASE B
STEP 3: Calculate work energy
$F_D = \frac{T - (9{,}8 \times M \times K \times \sin\theta)}{R_S}$
$F_D = \frac{350 - (9{,}8 \times 50 \times 0{,}6 \times 0{,}5)}{0{,}4}$
$F_D = 507{,}5\ N$
$E_W = F_D \times S$
$E_W = 507{,}5 \times 0{,}025$
$E_W = 12{,}7\ Nm$

STEP 4: Calculate total energy per cycle
$E_T = E_K + E_W$
$E_T = 36 + 12{,}7$
$E_T = 48{,}7\ Nm/c$

STEP 5: Calculate total energy per hour: not applicable, C=1

STEP 6: Calculate impact velocity and confirm selection
$V = R_S \times \omega$
$V = 0{,}4 \times 2$
$V = 0{,}8\ m/s$

Model OEM 1.0M is adequate.

EXAMPLE 14:
Vertical Rotating Beam

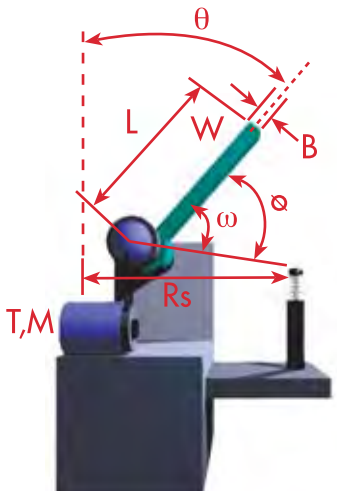

STEP 1: Application Data
(M) Mass= 245 kg
(ω) Angular velocity = 3,5 rad/s
(T) Torque = 30 Nm
(θ) Starting point from true vertical = 20°
(Ø) Angle of rotation = 50°
(R_S) Mounting radius = 0,5 m
(B) Thickness = 0,06 m
(L) Length = 0,6 m
(C) Cycles/Hr = 1

STEP 2: Calculate kinetic energy
$K = 0{,}289 \times \sqrt{4 \times L^2 + B^2}$
$K = 0{,}289 \times \sqrt{4 \times 0{,}6^2 + 0{,}06^2}$
$K = 0{,}35\ m$
$I = M \times K^2 = 245 \times 0{,}35^2$
$I = 30\ kgm^2$
$E_K = \frac{I \times \omega^2}{2} = \frac{30 \times 3{,}5^2}{2} = 184\ Nm$

Assume Model OEM 1.5M x 2 is adequate (Page 27).

STEP 3:
$F_D = \frac{T + [9{,}8 \times M \times K \times \sin(\theta + Ø)]}{R_S}$
$F_D = \frac{30 + [9{,}8 \times 245 \times 0{,}35 \times \sin(20° + 50°)]}{0{,}5}$
$F_D = 1\,640\ N$

$E_W = F_D \times S$
$E_W = 1\,640 \times 0{,}05$
$E_W = 82\ Nm$

STEP 4: Calculate total energy per cycle
$E_T = E_K + E_W$
$E_T = 184 + 82$
$E_T = 266\ Nm/c$

STEP 5: Calculate total energy per hour: not applicable, C=1

STEP 6: Calculate impact velocity and confirm selection
$V = R_S \times \omega$
$V = 0{,}5 \times 3{,}5$
$V = 1{,}75\ m/s$

Model OEMXT 1.5M x 2 is adequate.

Shock Absorber Sizing Examples
Typical Shock Absorber Applications

Overview

EXAMPLE 15:
Vertical Rotating Lid

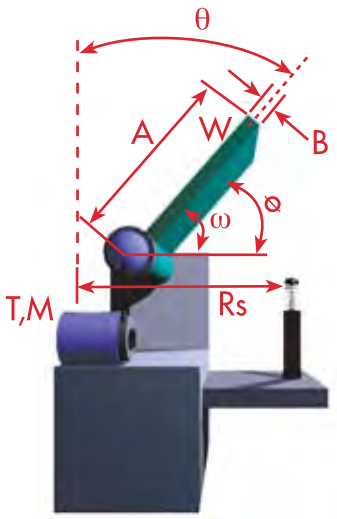

STEP 1: Application Data
(M) Mass = 910 kg
(ω) Angular velocity = 2 rad/s
(kW) Motor rating = 0,20 kW
(θ) Starting point from true vertical = 30°
(Ø) Angle of rotation = 60°
(R_S) Mounting radius = 0,8 m
(A) Width = 1,5 m
(B) Thickness = 0,03 m
(C) Cycle/Hr = 1

STEP 2: Calculate kinetic energy
$K = \mathbf{0{,}289} \times \sqrt{\mathbf{4} \times A^2 + B^2}$
$K = \mathbf{0{,}289} \times \sqrt{\mathbf{4} \times 1{,}50^2 + 0{,}03^2}$
$K = 0{,}87$ m

$I = M \times K^2 = 910 \times 0{,}87^2$
$I = 688{,}8$ kgm²
$E_K = \frac{I \times \omega^2}{2} = \frac{688{,}8 \times 2^2}{2}$
$E_K = 1\,377{,}6$ Nm
Assume Model OEM 3.0M x 2 is adequate (Page 21).

STEP 3: Calculate work energy
$T = \frac{\mathbf{3\,000} \times kW}{\omega}$
$T = \frac{\mathbf{3\,000} \times 0{,}20}{2} = 300$ Nm
$F_D = \frac{T + (\mathbf{9{,}8} \times M \times K \times \sin(\theta + Ø))}{R_S}$
$F_D = \frac{300 + (\mathbf{9{,}8} \times 910 \times 0{,}87 \times \sin(60° + 30°))}{0{,}8}$
$F_D = 10\,073$ N
$E_W = F_D \times S$
$E_W = 10\,073 \text{ N} \times 0{,}05$
$E_W = 503{,}7$ Nm

STEP 4: Calculate total energy per cycle
$E_T = E_K + E_W$
$E_T = 1\,377{,}6 + 503{,}7$
$E_T = 1\,881{,}3$ Nm/c

STEP 5: Calculate total energy per hour: not applicable, C=1

STEP 6: Calculate impact velocity and confirm selection
$V = R_S \times \omega$
$V = 0{,}8 \times 2$
$V = 1{,}6$ m/s

Model OEM 3.0M x 2 is adequate.

EXAMPLE 16:
Vertical Rotation with Known Intertia Aided by Gravity

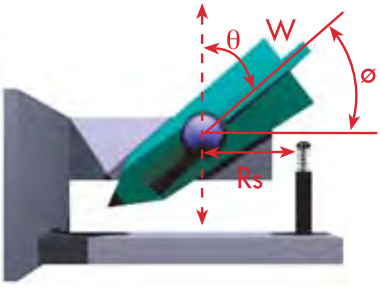

STEP 1: Application Data
(M) Mass = 100 kg
(I) Known Intertia = 100 kgm²
(C/G) Center-of-Gravity = 305 mm
(θ) Starting point from true vertical = 60°
(Ø) Angle of rotation at impact = 30°
(R_S) Mounting radius = 254 mm
(C) Cycles/Hr = 1

STEP 2: Calculate kinetic energy
$H = C/G \times [\cos(\theta) - \cos(Ø+\theta)]$
$H = 0{,}305 \times [\cos(60°) - \cos(30°+60°)]$
$E_K = \mathbf{9{,}8} \times M \times H$
$E_K = \mathbf{9{,}8} \times 100 \times 0{,}5$
$E_K = 149{,}5$ Nm

STEP 3: Calculate work energy
$F_D = (\mathbf{9{,}8} \times M \times C/G \times \sin(\theta + Ø))/R_S$
$F_D = (\mathbf{9{,}8} \times 100 \times 0{,}305 \times \sin(60° + 30°))/0{,}254$
$F_D = 1176{,}8$ N
$E_W = F_D \times S = 1176{,}8 \times 0{,}025 = 29{,}4$ Nm

STEP 4: Calculate total energy per cycle
$E_T = E_K + E_W = 149{,}5 + 29{,}4$
$E_T = 178{,}9$ Nm/c

STEP 5: Calculate total energy per hour: not applicable, C=1
$E_TC = E_T \times C$
$E_TC = 178{,}9 \times 1$
$E_TC = 178{,}9$ Nm/hr

STEP 6: Calculate impact velocity and confirm selection
$\omega = \sqrt{(2 \times E_K)/I}$
$\omega = \sqrt{(2 \times 149{,}5)/100)} = 1{,}7$ rad/s

$V = R_S \times \omega = 0{,}254 \times 1{,}7 = 0{,}44$ m/s

Model OEM 1.15M x 1 is adequate (Page 24).

EXAMPLE 17:
Vertical Rotation with Known Intertia Aided by Gravity (w/Torque)

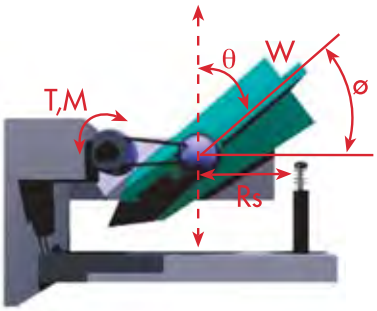

STEP 1: Application Data
(M) Mass = 100 kg
(ω) Angular Velocity = 2 rad/s
(T) Torque = 310 Nm
(I) Known Intertia = 100 kgm²
(C/G) Center-of-Gravity = 305 mm
(θ) Starting point from true vertical = 60°
(Ø) Angle of rotation at impact = 30°
(R_S) Mounting radius = 254 mm
(C) Cycles/Hr = 100

STEP 2: Calculate kinetic energy
$E_K = (I \times \omega^2)/2$
$E_K = (100 \times 2^2)/2$
$E_K = 200$ Nm

STEP 3: Calculate work energy
$F_D = [T + (\mathbf{9{,}8} \times M \times C/G \times \sin(\theta + Ø)]/R_S$
$F_D = [310 + (\mathbf{9{,}8} \times 100 \times 0{,}305 \times \sin(60°+30°)]/0{,}254$
$F_D = 2\,397{,}2$ N
$E_W = F_D \times S = 2\,397 \times 0{,}025 = 59{,}9$ Nm

STEP 4: Calculate total energy per cycle
$E_T = E_K + E_W = 200 + 59{,}9$
$E_T = 259{,}9$ Nm/c

STEP 5: Calculate total energy per hour: not applicable, C=1
$E_TC = E_T \times C$
$E_TC = 259{,}9 \times 100$
$E_TC = 25\,990$ Nm/hr

STEP 6: Calculate impact velocity and confirm selection
$V = R_S \times \omega = 0{,}254 \times 2 = 0{,}51$ m/s

Model OEMXT 1.5M x 1 is adequate (Page 27).

EXAMPLE 18:
Vertical Rotation with Known Intertia Opposing Gravity (w/Torque)

STEP 1: Application Data
(M) Mass = 100 kg
(ω) Angular Velocity = 2 rad/s
(T) Torque = 310 Nm
(I) Known Intertia = 100 kgm²
(C/G) Center-of-Gravity = 305 mm
(θ) Starting point from true vertical = 120°
(Ø) Angle of rotation at impact = 30°
(R_S) Mounting radius = 254 mm
(C) Cycles/Hr = 100

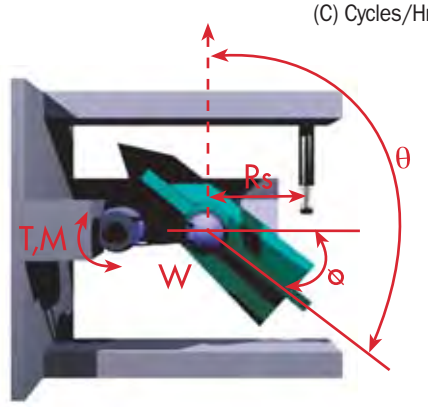

STEP 2: Calculate kinetic energy
$E_K = (I \times \omega^2)/2$
$E_K = (100 \times 2^2)/2$
$E_K = 200$ Nm

STEP 3: Calculate work energy
$F_D = [T - (\mathbf{9{,}8} \times M \times C/G \times \sin(\theta - Ø))]/R_S$
$F_D = [310 - (\mathbf{9{,}8} \times 100 \times 0{,}305 \times \sin(120° - 30°))]/0{,}254$
$F_D = 43{,}7$ N
$E_W = F_D \times S = 43{,}7 \times 0{,}025 = 1{,}1$ Nm

STEP 4: Calculate total energy per cycle
$E_T = E_K + E_W = 200 + 1{,}1$
$E_T = 201{,}1$ Nm/c

STEP 5: Calculate total energy per hour: not applicable, C = 1
$E_TC = E_T \times C$
$E_TC = 201{,}1 \times 100$
$E_TC = 20\,110$ Nm/hr

STEP 6: Calculate impact velocity and confirm selection
$V = R_S \times \omega = 0{,}254 \times 2 = 0{,}51$ m/s

Model OEMXT 1.5M x 1 is adequate (Page 27).

EXAMPLE 19:
Vertical Rotation Pinned at Center (w/Torque)

STEP 1: Application Data
(M) Mass = 100 kg
(ω) Angular velocity = 2 rad./s
(T) Torque = 310 Nm
(A) Length = 1,016 mm
(R_S) Mounting radius = 254 mm
(B) Thickness = 50,8 mm
(C) Cycles/Hr = 100

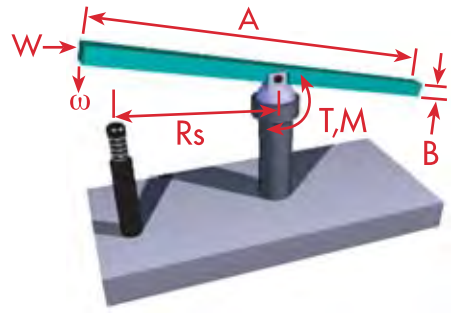

STEP 2: Calculate kinetic energy
$K = \mathbf{0{,}289} \times \sqrt{A^2 + B^2}$
$K = \mathbf{0{,}289} \times \sqrt{1{,}016^2 + 0{,}0508^2}$
$= 0{,}29$ m
$I = M \times K^2$
$I = 100 \times 0{,}29^2 = 8{,}6$ kgm²
$E_K = (I \times \omega^2)/2$
$E_K = (8{,}6 \times 2^2)/2$
$E_K = 17{,}2$ Nm

Assume Model OEM 1.0 is adequate (Page 21).

STEP 3: Calculate work energy
$F_D = T/R_S$
$F_D = 310/0{,}254$
$F_D = 1\,220{,}5$ N
$E_W = F_D \times S = 1\,220{,}5 \times 0{,}025$
$= 30{,}5$ Nm

STEP 4: Calculate total energy per cycle
$E_T = E_K + E_W = 17{,}2 + 30{,}5$
$E_T = 47{,}7$ Nm/c

STEP 5: Calculate total energy per hour
$E_TC = E_T \times C$
$E_TC = 47{,}7 \times 100$
$E_TC = 4\,770$ Nm/hr

STEP 6: Calculate impact velocity and confirm selection
$V = R_S \times \omega = 0{,}254 \times 2 = 0{,}51$ m/s

Model OEM 1.0M is adequate.

Shock Absorber Sizing Examples

Typical Shock Absorber and Crane Applications

Calculaions assume worst case scenario of 90% trolley weight over one rail.

Crane A		Per Buffer
Propelling Force Crane	kN	
Propelling Force Trolley	kN	
Weight of Crane (W_a)	t	
Weight of Trolley (W_{ta})	t	
Crane Velocity (V_a)	m/s	
Trolley Velocity (V_{ta})	m/s	

Crane B		Per Buffer
Propelling Force Crane	kN	
Propelling Force Trolley	kN	
Weight of Crane (W_a)	t	
Weight of Trolley (W_{ta})	t	
Crane Velocity (V_a)	m/s	
Trolley Velocity (V_{ta})	m/s	

Crane C		Per Buffer
Propelling Force Crane	kN	
Propelling Force Trolley	kN	
Weight of Crane (W_a)	t	
Weight of Trolley (W_{ta})	t	
Crane Velocity (V_a)	m/s	
Trolley Velocity (V_{ta})	m/s	

Please note:

Unless instructed otherwise, ITT Enidine will always calculate with:

- 100% velocity v, and
- 100% propelling force F_D

Front View

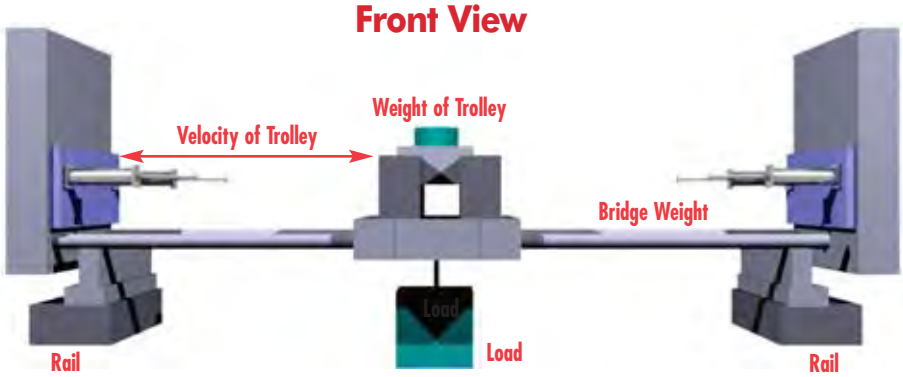

Plan Views

Application 1

Crane A against Solid Stop

Velocity:

$V_r = V_a$

Impact weight per buffer:

$$W_d = \frac{Wa + (1,8)\ Wta}{\text{Total Number of Shocks}}$$

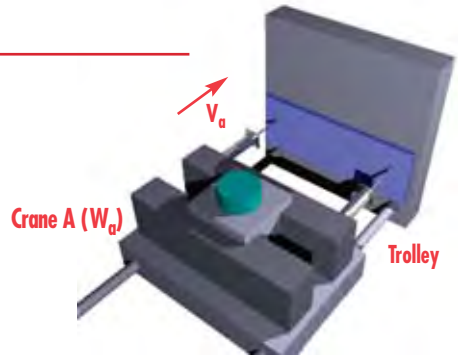

Application 2

Crane A against Crane B

Velocity:

$V_r = V_a + V_b$

Impact weight per buffer:

$W_1 = Wa + (1,8)\ Wta$

$W_2 = Wb + (1,8)\ Wtb$

$$W_d = \frac{W_1\ W_2}{(W_1 + W_2)(\text{Total Number of Shocks})}$$

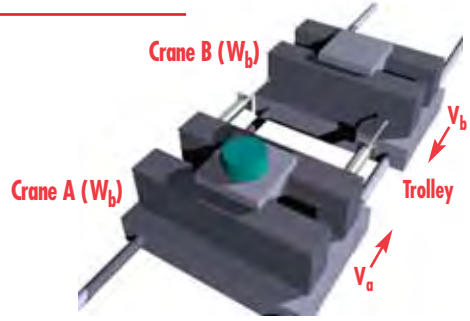

Application 3

Crane B against Crane C

Velocity:

$$V_r = \frac{V_b + V_c}{2}$$

Impact weight per buffer:

$W_1 = Wb + (1,8)\ Wtb$

$W_2 = Wc + (1,8)\ Wtc$

$$W_d = \frac{2\ W_1\ W_2}{(W_1 + W_2)(\text{Number of Shocks Per Rail})}$$

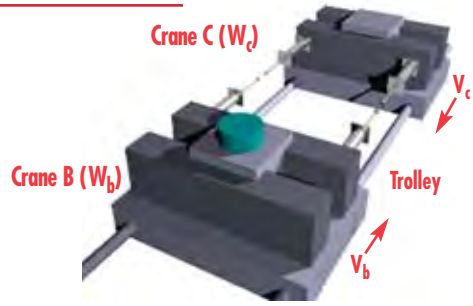

Application 4

Crane C against Solid Stop with Buffer

Velocity:

$$V_r = \frac{V_c}{2}$$

Impact weight per buffer:

$W_1 = W_c + 1,8\ (W_{tc})$

$$W_d = \frac{2\ W_1}{\text{Number of Shocks Per Rail}}$$

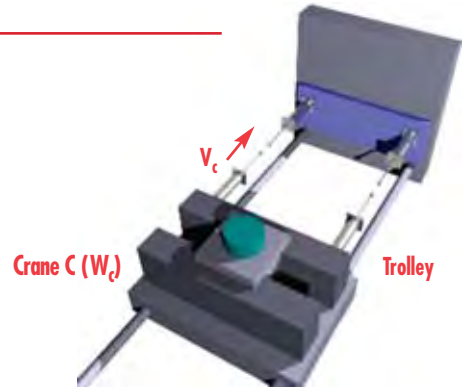

ITT ENGINEERED FOR LIFE
www.enidine.eu
Email: info@enidine.eu
Tel.: +49 6063 9314 0
Fax: +49 6063 9314 44

Please note that this example is not based on any particular standard. The slung load can swing freely, and is therefore not taken into account in the calculation.

Calculation Example for Harbor Cranes as Application 1

Given Values

Total Weight of Bridge:	**380 t**
Weight of Trolley:	**45 t**
Crane Velocity:	**1,5 m/s**
Required Stroke:	**600 mm**
Trolley Velocity:	**4,0 m/s**
Required Stroke:	**1 000 m**

Determination of the Maximum Impact Mass W_d per Buffer

$$W_d = \frac{Wa + 1{,}8\ W{+}a}{\text{Total Number of Shocks}}$$

$$W_d = \frac{380\ t + (1{,}8)45\ t}{2}$$

$$\mathbf{W_d = 230.5\ t}$$

Determine Size of Shock Absorber for Crane

$$E_K = \frac{W_d}{2} \bullet V_r^2$$

$$E_K = \frac{230.5}{2} \bullet (1{,}5\ m/s)^2$$

$$\mathbf{E_K = 259\ kN}$$

$V_r = V_A$ (Application 1)

E_K = Kinetic Energy

η = Efficiency

Selecting for required 600mm stroke:
HD 5.0 x 24, maximum shock force ca. 460 kN = $F_s = \frac{E_K}{s \bullet \eta}$

Determine Size of Shock Absorber for Trolley

M_D = Trolley Mass per Shock Absorber

$$M_D = \frac{45\ t}{2}$$

$$\mathbf{M_D = 22{,}5\ t}$$

$$E_K = \frac{M_D}{2} \bullet V_r^2$$

$$E_K = \frac{22{,}5\ t}{2} \bullet (4\ m/s)^2$$

$$\mathbf{E_K = 180\ kNm}$$

$V_r = V_A$ Application 1

Selecting for required 1 000 mm stroke:
HDN 4.0 x 40, maximum shock force ca. 212 kN = $F_s = \frac{E_K}{s \bullet \eta}$

Shock Absorber Sizing Examples

Typical Shock Absorber and Crane Applications

Overview

Application 1	Value
Buffer Distance H	m
Distance X_1	m
Distance Y_1	m
Distance X_2	m
Distance Y_2	m
Total Weight	t
$W_{max\ d}$	t
$W_{min\ d}$	t
$W_{max\ u}$	t
$W_{min\ u}$	t

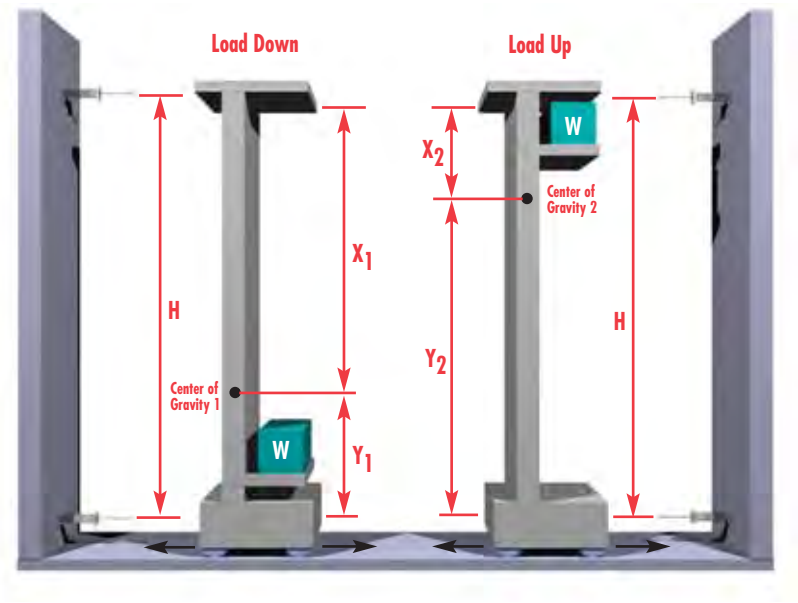

Calculation Example Stacker Cranes

Please note that this example shows how to calculate the maximum impact weight on the upper and lower shock absorbers for a stacker crane.

Distance Between Buffers:	**H = 20 m**	**Given Values**
Distance to C of G1 - Upper:	**X_1 = 15 m**	
Distance to C of G1 - Lower:	**Y_1 = 5 m**	
Distance to C of G2 - Upper:	**X_2 = 7 m**	
Distance to C of G1 - Lower:	**Y_2 = 13 m**	
Total Weight:	**W = 20 t**	
$W_{max\ d} = \frac{X_1}{H} \bullet W$	$W_{max\ d} = \frac{X_2}{H} \bullet W$	**Calculation for Lower Shock Absorbers**
$W_{max\ d} = \frac{15\ m}{20\ m} \bullet 20\ t$	$W_{max\ d} = \frac{7\ m}{20\ m} \bullet 20\ t$	
$W_{max\ d} = 15\ t$	$W_{max\ d} = 7\ t$	
$W_{max\ d} = \frac{Y_1}{H} \bullet W$	$W_{max\ d} = \frac{Y_2}{H} \bullet W$	**Calculation for Upper Shock Absorbers**
$W_{max\ d} = \frac{5\ m}{20\ m} \bullet 20\ t$	$W_{max\ d} = \frac{13\ m}{20\ m} \bullet 20\ t$	
$W_{max\ d} = 5\ t$	$W_{max\ d} = 13\ t$	
Using the value for W_{max} obtained above, the kinetic energy can be calculated, and a shock absorber selected.		**Shock Absorber Selection**

ITT ENGINEERED FOR LIFE
www.enidine.eu Email: info@enidine.eu Tel.: +49 6063 9314 0 Fax: +49 6063 9314 44

Overhead Crane Applications

Cargo Crane Applications

Stacker Carne Applications

Shock Absorber and Rate Controls Quick Selection Guide

Typical Selections

Technical Data

Use this **ITT Enidine Product Quick Selection Guide** to quickly locate potential shock absorber models most suited for your requirements. Models are organized in order of smallest to largest energy capacity per cycle within their respective product families.

ITT Enidine Adjustable Shock Absorbers

Catalog No. Model	(S) Stroke mm	E_T Max. Nm/c	E_TC Max. Nm/hr	Damping Type	Page No.
ECO OEM 0.1M (B)	7,0	7,0	13 600	D	21
ECO OEM .15M (B)	10,0	7,0	20 900	D	21
ECO OEM .25M (B)	10,0	7,0	22 000	D	21
ECO (LR)OEM .25M (B)	10,0	7,0	22 000	D	21
ECO OEM .35M (B)	12,0	19,0	37 400	D	21
ECO (LR)OEM .35M (B)	12,0	19,0	37 400	D	21
ECO OEM .5M (B)	12,0	31,0	35 200	D	21
ECO (LR)OEM .5M (B)	12,0	31,0	35 200	D	21
ECO OEM 1.0M (B)	25,0	81,0	77 000	C	21
ECO (LR)OEM 1.0M (B)	25,0	81,0	77 000	C	21
ECO OEM 1.15M X 1	25,0	215,0	83 300	C	24
ECO (LR)OEM 1.15M X 1	25,0	215,0	83 300	C	24
ECO OEM 1.15M X 2	50,0	424,0	108 800	C	24
ECO (LR)OEM 1.15M X 2	50,0	424,0	108 800	C	24
ECO OEM 1.25M x 1	25,0	215,0	100 100	C	24
ECO (LR)OEM 1.25M x 1	25,0	215,0	100 100	C	24
ECO OEM 1.25M x 2	50,0	424,0	122 500	C	24
ECO (LR)OEM 1.25M x 2	50,0	424,0	122 500	C	24
(LR)OEMXT ¾ x 1	25,0	425,0	126 000	C	27
OEMXT ¾ x 1	25,0	425,0	126 000	C	27
(LR)OEMXT 1.5M x 1	25,0	425,0	126 000	C	27
OEMXT 1.5M x 1	25,0	425,0	126 000	C	27
(LR)OEMXT ¾ x 2	50,0	850,0	167 000	C	27
OEMXT ¾ x 2	50,0	850,0	167 000	C	27
(LR)OEMXT 1.5M x 2	50,0	850,0	167 000	C	27
OEMXT 1.5M x 2	50,0	850,0	167 000	C	27
OEMXT ¾ x 3	75,0	1 300,0	201 000	C	27
OEMXT 1.5M x 3	75,0	1 300,0	201 000	C	27
(LR)OEMXT 1⅛ x 2	50,0	2 300,0	271 000	C	29
OEMXT 1⅛ x 2	50,0	2 300,0	271 000	C	29
(LR)OEMXT 2.0M x 2	50,0	2 300,0	271 000	C	29
OEMXT 2.0M x 2	50,0	2 300,0	271 000	C	29
OEM 3.0M x 2	50,0	2 300,0	372 000	C	31
OEMXT 1⅛ x 4	100,0	4 500,0	362 000	C	29
OEMXT 2.0M x 4	100,0	4 500,0	362 000	C	29
OEM 4.0M x 2	50,0	3 800,0	1 503 000	C	31
OEM 3.0M x 3.5	90,0	4 000,0	652 000	C	31
OEMXT 1⅛ x 6	150,0	6 780,0	421 000	C	29
OEMXT 2.0M x 6	150,0	6 780,0	421 000	C	29
OEM 3.0M x 5	125,0	5 700,0	933 000	C	31
OEM 3.0M x 6.5	165,0	7 300,0	1 215 000	C	31
OEM 4.0M x 4	100,0	7,700,0	1 808 000	C	31
OEM 4.0M x 6	150,0	11 500,0	2 012 000	C	31
OEM 4.0M x 8	200,0	15 400,0	2 407 000	C	31
OEM 4.0M x 10	250,0	19 200,0	2 712 000	C	31

Key for Damping Type:
D – Dashpot
C – Conventional
SC – Self-compensating

ITT Enidine Non-Adjustable Shock Absorbers

Catalog No. (Model)	(S) Stroke mm	E_T Max. Nm/c	E_TC Max. Nm/hour	Damping Type	Page No.
TK 6	4,0	1,0	3 600	D	39
TK 8	4,0	6,0	4 800	D	39
TK 21	6,4	2,2	4 100	D	40
ECO 8	6,4	4,0	6 215	SC	47
TK 10M	6,4	6,0	13 000	D	40
ECO 10	7,0	7,0	13 640	SC	47
ECO 15	10,4	12,0	31 020	SC	47
STH .25M	6,0	11,0	4 420	D	41
ECO S 25	12,7	24,0	37 400	SC	47
ECO 25	12,7	30,0	44 000	SC	47
ECOS 50	12,7	32,0	49 720	SC	47
ECO 50	22,0	62,0	59 070	SC	47
STH .5M	12,5	65,0	44 200	D	41
ECO 100	25,0	105,0	77 000	SC	47
ECO 110	25,0	210,0	84 000	SC	50
ECO 120	25,0	185,0	84 000	SC	50
ECO 125	25,0	185,0	104 000	SC	50
PMXT 1525	25,0	367,0	126 000	SC	59
STH .75M	19,0	245,0	88 400	D	41
ECO 220	50,0	350,0	103 000	SC	50
ECO 225	50,0	350,0	127 000	SC	50
PMXT 1550	50,0	735,0	167 000	SC	59
STH 1.0M	25,0	500,0	147 000	D	41
PMXT 1575	75,0	1 130,0	201 000	SC	59
STH 1.0M x 2	50,0	1 000,0	235 000	D	41
PMXT 2050	50,0	1 865,0	271 000	SC	59
STH 1.5M x 1	25,0	1 150,0	250 000	D	41
PMXT 2100	100,0	3 729,0	362 000	SC	59
STH 1.5M x 2	50,0	2 300,0	360 000	D	41
PMXT 2150	150,0	5 650,0	421 000	SC	59

Key for Damping Type:
D – Dashpot
C – Conventional
SC – Self-compensating

ITT ENGINEERED FOR LIFE
www.enidine.eu Email: info@enidine.eu Tel.: +49 6063 9314 0 Fax: +49 6063 9314 44

Use this **ITT Enidine Product Quick Selection Guide** to quickly locate potential shock absorber models most suited for your requirements. Models are organized in order of smallest to largest energy capacity per cycle within their respective product families.

ITT Enidine Heavy Duty Shock Absorbers

Catalog No. Model	(S) Stroke mm	E_T Min./Max. Nm/c		Damping Type	Page No.
HDN 1.5 x (Stroke)	50-800	3 200	36 500	C, P, SC	66
HDN 2.0 x (Stroke)	150-400	14 400	104 200	C, P, SC	67
HDN 3.0 x (Stroke)	50-1 500	9 600	206 800	C, P, SC	68
HDA 3.0 x (Stroke)	50-300	4 500	27 200	C	71
HDN 3.5 x (Stroke)	50-1 400	13 000	273 000	C, P, SC	69
HDN 4.0 x (Stroke)	50-1 200	15 700	329 300	C, P, SC	70
HDA 4.0 x (Stroke)	50-250	13 500	67 500	C	72
HD 5.0 x (Stroke)	100-1 200	46 700	467 000	C, P, SC	74
HD 6.0 x (Stroke)	100-1 200	76 500	805 000	C, P, SC	75

Key for Damping Type:
D – Dashpot
C – Conventional
P – Progressive
SC – Self-compensating

ITT Enidine Heavy Industry Shock Absorbers

Catalog No. Model	(S) Stroke mm	E_T Min./Max. Nm/c		Damping Type	Page No.
HI 50 x (Stroke)	50-100	3 050	6 200	C, P, SC	81
HI 85 x (Stroke)	50-100	6 700	13 500	C, P, SC	81
HI 100 x (Stroke)	50-800	10 000	132 000	C, P, SC	81
HI 120 x (Stroke)	100-1 000	32 000	132 000	C, P, SC	81
HI 130 x (Stroke)	250-800	100 000	270 000	C, P, SC	82
HI 150 x (Stroke)	115-1 000	62 000	510 000	C, P, SC	82

Key for Damping Type:
D – Dashpot
C – Conventional
P – Progressive
SC – Self-compensating

Jarret Shock Absorbers

Catalog No. Model	(S) Stroke mm	Min./Max. Energy Capacity kJ		Damping Type	Page No.
BC1N	12-80	0,1	14	–	85
BC5	105-180	25	150	–	87
XLR	150-800	6	150	–	89
BCLR	400-1 300	100	1 000	–	91

ITT Enidine Adjustable Rate Controls

Catalog No. Model	(S) Stroke mm	F_D Max. Propelling Force		E_TC Max. Nm/hr	Page No.
		Tension N	Compression N		
ADA 505M	50,0	2 000	2 000	73 450	99
ADA 510M	100,0	2 000	1 670	96 050	99
ADA 515M	150,0	2 000	1 335	118 650	99
ADA 520M	200,0	2 000	900	141 250	99
ADA 525M	250,0	2 000	550	163 850	99
ADA 705M	50,0	11 000	11 000	129 000	100
ADA 710M	100,0	11 000	11 000	168 000	100
ADA 715M	150,0	11 000	11 000	206 000	100
ADA 720M	200,0	11 000	11 000	247 000	100
ADA 725M	250,0	11 000	11 000	286 000	100
ADA 730M	300,0	11 000	11 000	326 000	100
ADA 735M	350,0	11 000	11 000	366 000	100
ADA 740M	400,0	11 000	11 000	405 000	101
ADA 745M	450,0	11 000	8 800	444 000	101
ADA 750M	500,0	11 000	7 500	484 000	101
ADA 755M	550,0	11 000	6 200	524 000	101
ADA 760M	600,0	11 000	5 300	563 000	101
ADA 765M	650,0	11 000	4 500	603 000	101
ADA 770M	700,0	11 000	4 000	642 000	101
ADA 775M	750,0	11 000	3 500	681 000	101
ADA 780M	800,0	11 000	3 100	721 000	101

ITT Enidine Non-Adjustable Rate Controls

Catalog No. Model	(S) Stroke mm	F_D Max. Propelling Force		E_TC Max. Nm/C	Page No.
		Tension N	Compression N		
DA 705	50,0	11 121	11 121	565	103
DA 710	100,0	11 121	11 121	1 120	103
DA 715	150,0	11 121	11 121	1 695	103
DA 720	200,0	11 121	11 121	2 260	103
DA 75M x 50	50,0	22 250	22 250	1 120	103
DA 75M x 100	100,0	22 250	22 250	2 240	103
DA 75M x 150	150,0	22 250	22 250	3 360	104
DA 75M x 200	200,0	22 250	22 250	4 480	104
DA 75M x 250	250,0	22 250	22 250	5 600	104
TB 100M x 100	100,0	44 482	44 482	4 480	104
TB 100M x 150	150,0	44 482	44 482	6 779	104

Adjustable Series Hydraulic Shock Absorbers

ECO OEM / OEMXT Series

Overview

RoHS COMPLIANT

ITT Enidine Adjustable Hydraulic Series shock absorbers offer the most flexible solutions to energy absorption application requirements when input parameters vary or are not clearly defined.

ITT Enidine's **New ECO OEM Series** adjustable hydraulic shock absorbers are an expansion of our previously released ECO Series product line. These adjustable shock absorbers provide maximum flexibility in a RoHS compliant package. By simply turning an adjustment knob, the damping force can be changed to accommodate a wide range of conditions. ITT Enidine offers the broadest range of adjustable shock absorbers and mounting accessories in the marketplace today.

The ITT Enidine **OEMXT Series** provides a low profile adjustment knob offered in imperial or metric thread configurations with stroke lengths of 25 to 150 mm for drop-in competitive interchange. **Low Range (LROEMXT) Series** products are also available to control velocities as low as 0,08 m/s and propelling forces as high as 17 790 N OEMXT and OEM Large Series shock absorbers are fully field repairable.

Features and Benefits

- **Adjustable design lets you "fine-tune"** your desired damping and lock the numbered adjustment setting.
- **Internal orifice design** provides deceleration with the most efficient damping characteristics, resulting in the lowest reaction forces in the industry.
- **Threaded cylinders provide mounting flexibility** and increase surface area for improved heat dissipation.
- **Operational parameters can be expanded** through the use of Enidine's Low Range and High Performance products.
- **Custom orificed non-adjustable** units (CBOEM) can be engineered to meet specific application requirements or **emergency impact only requirements.**
- **Special materials and finishes** can be designed to meet specific customer requirements.
  - Optional fluids and seal packages can expand the standard operating temperature range from (–10°C to 80°C) to (–30°C to 100°C).
  - Food grade options available
- **ISO quality standards** result in reliable, long-life operation.
- **Fully field repairable units are available** in mid-bore and larger bore product ranges.

Added New Features for the ECO OEM Series

- **Environmentally friendly materials:**
  - ROHS Compliant materials
  - Bio-degradable hydraulic oil
  - Recyclable packaging materials
- **Introducing our new Enicote II surface finish:**
  - ROHS Compliant
  - Rated at 350 hours salt spray corrosion protection
- **Jam Nut included** with every shock absorber.
- **Wrench flats** promote ease of mounting
- **Capability to mount into pressure chambers**
- **Integrated positive stopping capabilities** up to 7 bar.

ITT Enidine Adjustable Single Orifice Shock Absorbers

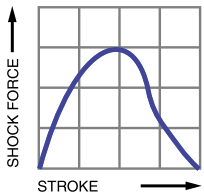

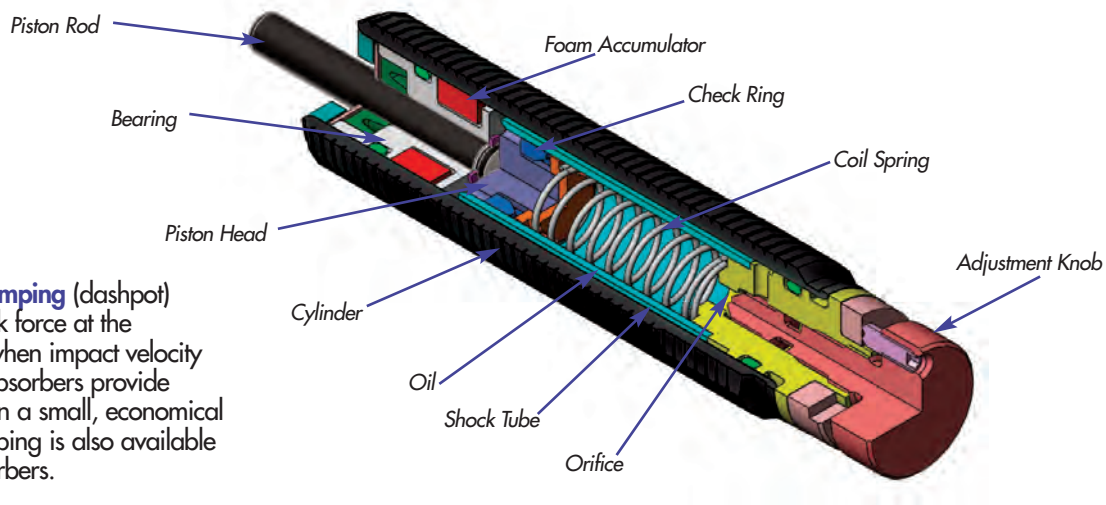

Constant orifice area damping (dashpot) provides the largest shock force at the beginning of the stroke when impact velocity is highest. These shock absorbers provide high-energy absorption in a small, economical design. This type of damping is also available in adjustable shock absorbers.

The damping force of an ITT Enidine single orifice shock absorber can be changed by turning the adjustment knob. Maximum damping force is achieved by turning the adjustment knob to eight (8), while minimum damping force is achieved by turning the adjustment knob to zero (0). Turning the adjustment knob causes the adjustment ball to increase or decrease the clearance (orifice area) between the ball and its seat, depending on rotation direction.

The internal structure of an adjustable single orifice shock absorber is shown above. When force is applied to the piston rod, the check ball is seated and the valve remains closed.

Oil is forced out of the high pressure shock tube chamber through the orifice, creating internal pressure allowing smooth, controlled deceleration of the moving load. When the load is removed, the compressed coil spring moves to reposition the piston head, the check ball unseats, opening the valve that permits rapid piston rod return to the original extended position. The closed cellular foam accumulator compensates for fluid displaced by the piston rod during compression and extension. Without the fluid displacement volume provided by the foam accumulator, the closed system would be hydraulically locked. This type of orifice design produces constant orifice area damping.

ITT Enidine Adjustable Multiple Orifice Shock Absorbers

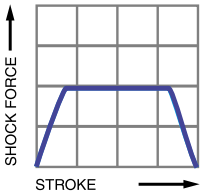

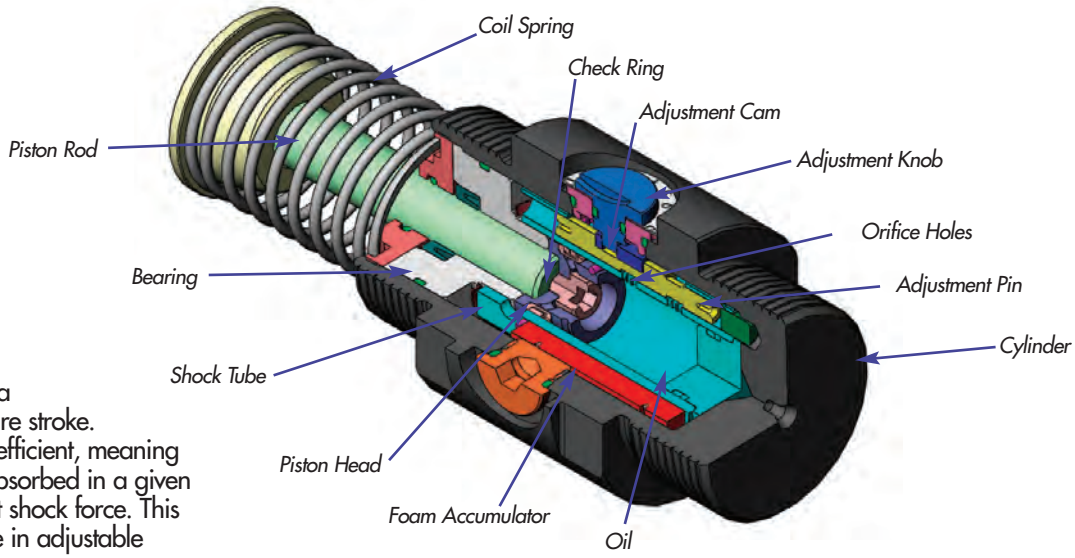

Conventional damping allows linear deceleration by providing a constant shock force over the entire stroke. This standard design is the most efficient, meaning it allows the most energy to be absorbed in a given stroke, while providing the lowest shock force. This type of damping is also available in adjustable shock absorbers.

The adjustable multiple orifice shock absorber is similar to the principles described earlier. The check ring replaces the check ball and the adjustment feature uses an adjustment pin instead of an adjustment ball. The damping force of the shock absorber can be changed by turning the adjustment knob. Maximum damping force is achieved by turning the adjustment knob to eight (8), while minimum damping force is achieved by turning the adjustment knob to zero (0).

Turning the adjustment knob rotates the adjustment cam within the shock absorber. The cam, in turn, moves the adjustment pin in the shock tube, closing or opening the orifice holes. by closing the orifice holes, the total orifice area of the shock absorber is reduced, thus increasing the damping force of the shock absorber. The adjustable shock absorber enables the user to change the damping force of the unit, should input conditions change, while still maintaining a conventional-type damping curve. Low velocity range (LR) series configurations are available for controlling velocities that fall below the standard adjustable range.

Adjustable Series Hydraulic Shock Absorbers

ECO OEM Small Bore Series

ECO OEM 0.1M → ECO (LR)OEM 1.0M Series

Technical Data

Standard

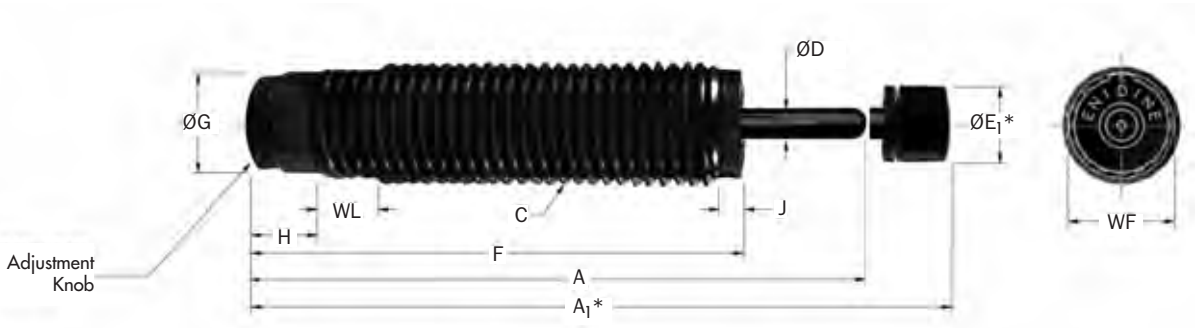

*Note: A_1 and E_1 apply to button models. One Hex Jam Nut included with every shock absorber.

Catalog No./ Model	(S) Stroke mm	Optimal Velocity Range m/s	E_T Max. Nm/c	E_TC Max. Nm/hr	F_P Max. Reaction Force N	Nominal Coil Spring Force		F_D Max. Propelling Force N	Mass g
						Extended N	Compressed N		
ECO OEM .1M (B)	7,0	0,3-3,30	6,0	12 400	1 220	2,2	4,5	350	28
ECO OEM .15M (B)	10,0	0,3-3,30	6,0	19 000	890	3,5	7,5	350	56
ECO OEM .25M (B)	10,0	0,3-3,30	6,0	20 000	890	3,5	7,5	350	56
ECO LROEM .25M (B)	10,0	0,08-1,30	6,0	20 000	890	3,5	7,5	440	56
ECO OEM .35M (B)	12,0	0,3-3,30	17,0	34 000	2 000	4,5	9,8	530	85
ECO LROEM .35M (B)	12,0	0,08-1,30	17,0	34 000	2 000	4,5	9,8	890	85
ECO OEM .5M (B)	12,7	0,3-4,50	28,0	32 000	3 500	5,8	12,4	670	141
ECO LROEM .5M (B)	12,7	0,08-1,30	28,0	32 000	3 500	8,9	17,0	1 120	141
ECO OEM 1.0M (B)	25,0	0,3-3,30	74,0	70 000	4 400	13,0	27,0	1 330	285
ECO OEM 1.0MF (B)	25,0	0,3-3,30	74,0	70 000	4 400	13,0	27,0	1 330	285
ECO LROEM 1.0M (B)	25,0	0,08-1,30	74,0	70 000	4 400	13,0	27,0	2 016	285
ECO LROEM 1.0MF (B)	25,0	0,08-1,30	74,0	70 000	4 400	13,0	27,0	2 016	285

Catalog No./ Model	A mm	A_1 mm	C mm	D mm	E_1 mm	F mm	G mm	H mm	J mm	WF mm	WL mm
ECO OEM 0.1M (B)	57,0	67,0	M10 x 1.0	3,0	8,6	49,4	8,6	10,2	–	–	–
ECO OEM 0.15M (B)	81,8	91,7	M12 x 1.0	3,3	8,6	71,4	10,9	14,2	–	11,0	9,7
ECO (LR)OEM .25M (B)	81,8	91,2	M14 x 1.5	3,3	11,2	71,4	10,9	14,2	–	12,0	12,7
ECO (LR)OEM .35M (B)	100,6	110,7	M16 x 1.5	4,0	11,2	87,4	11,2	14,5	0,5	14,0	12,7
ECO (LR)OEM .5M (B)	98,6	110,5	M20 x 1.5	4,8	12,7	84,1	16,0	17,0	–	18,0	12,7
ECO (LR)OEM 1.0M (B)	130,0	142,7	M27 x 3.0	6,4	15,7	104,0	22,0	14,0	4,6	23,0	12,7
ECO (LR)OEM 1.0MF (B)	130,0	142,7	M25 x 1.5	6,4	15,7	104,0	22,0	14,0	4,6	23,0	12,7

Notes: 1. All shock absorbers will function satisfactorily at 5% of their maximum rated energy per cycle. If less than 5%, a smaller model should be specified.
2. For mounting accessories, see pages 22-23.
3. (B) indicates button model of shock absorber. Buttons cannot be added to non-button models or removed from button models ECO OEM .1M to ECO OEM 1.0M.

ITT ENGINEERED FOR LIFE
www.enidine.eu Email: info@enidine.eu Tel.: +49 6063 9314 0 Fax: +49 6063 9314 44

Jam Nut (JN)

*Note: One Hex Jam Nut included with every shock absorber.

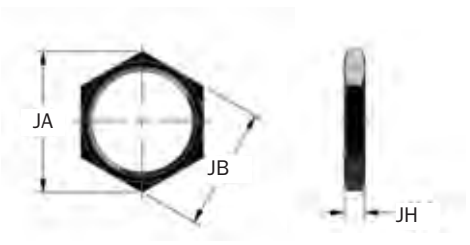

Catalog No./ Model	Part Number	Model Ref	JA mm	JB mm	JH mm	Mass g
JN M10 x 1	J223840167	ECO OEM 0.1M (B)	15,0	13,0	3,2	2
JN M12 x 1	J223841035	ECO OEM .15M (B)	17,0	15,0	4,0	2
JN M14 x 1.5	J223842165	ECO (LR)OEM .25M (B)	19,7	17,0	4,0	3
JN M16 x 1.5	J224055035	ECO (LR)OEM .35M (B)	20,0	19,0	6,0	5
JN M20 x 1.5	J223844035	ECO (LR)OEM .5M (B)	27,7	24,0	4,6	9
JN M27 x 3	J124059034	ECO (LR)OEM 1.0M (B)	37,0	32,0	4,6	15
JN M25 x 1.5	J223846035	ECO (LR)OEM 1.0MF (B)	37,0	32,0	4,6	15

Stop Collar (SC)

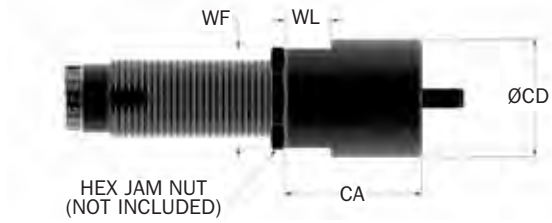

Catalog No./ Model	Part Number	Model Ref	CA mm	CD mm	WF mm	WL mm	Mass g
ΔSC M10 x 1	M923840171	ECO OEM 0.1M (B)	19,0	14,0	–	–	11
ΔSC M12 x 1	M923841058	ECO OEM 0.15M (B)	19,0	16,0	14,0	9,0	14
ΔSC M14 x 1.5	M923842171	ECO (LR)OEM .25M (B)	25,4	19,0	19,0	12,0	28
ΔSC M16 x 1.5	M924055199	ECO (LR)OEM .35M (B)	25,4	19,0	–	–	28
ΔSC M20 x 1.5	M924057058	ECO (LR)OEM .5M (B)	38,0	25,4	22,0	12,0	63
ΔSC M27 x 3	M923846170	ECO (LR)OEM 1.0M (B)	50,8	38,0	32,0	15,0	215
ΔSC M25 x 1.5	M923846171	ECO (LR)OEM 1.0MF (B)					

Notes: 1. *Do not use with urethane striker cap.
2. Δ = Non-standard lead time items, contact ITT Enidine.

Universal Retaining Flange (Small Bore) (UF)

UF M10 x 1 → UF M16 x 1,5

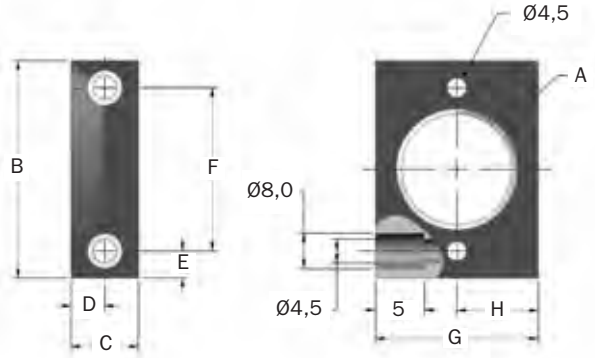

UF M20 x 1,5 → UF M27 x 3

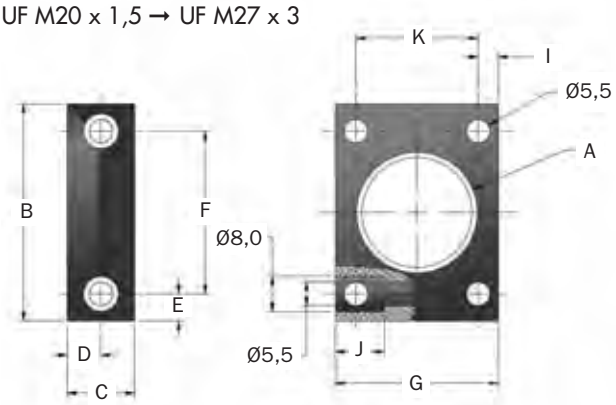

Catalog No./ Model	Part Number	Model Ref	A mm	B mm	C mm	D mm	E mm	F mm	G mm	H mm	I mm	J mm	K mm
ΔUF M10 x 1	U16363189	ECO OEM 0.1M (B)	M10 x 1	38,0	12,0	6,0	6,0	25,5	25,0	12,5	–	5	–
ΔUF M12 x 1	U15588189	ECO OEM .15M (B)	M12 x 1	38,0	12,0	6,0	6,0	25,5	25,0	12,5	–	5	–
ΔUF M14 x 1.5	U13935143	ECO (LR)OEM .25M (B)	M14 x 1,5	45,0	16,0	8,0	5,0	35,0	30,0	15,0	–	5	–
ΔUF M16 x 1.5	U19018143	ECO (LR)OEM .35M (B)	M16 x 1,5	45,0	16,0	8,0	5,0	35,0	30,0	15,0	–	–	–
Δ UF M20 x 1.5	U12646143	ECO (LR)OEM .5M (B)	M20 x 1,5	48,0	16,0	8,0	6,5	35,0	35,0	–	4,75	11,4	25,5
ΔUF M25 x 1.5	U13004143	ECO (LR)OEM 1.0MF (B)	M25 x 1,5	48,0	16,0	8,0	6,5	35,0	35,0	–	4,75	11,4	25,5
ΔUF M27 x 3	U12587143	ECO (LR)OEM 1.0M (B)	M27 X 3										

Notes: 1. Δ = Non-standard lead time items, contact ITT Enidine.
2. All dimensions in millimeters

Side Load Adaptor (SLA)

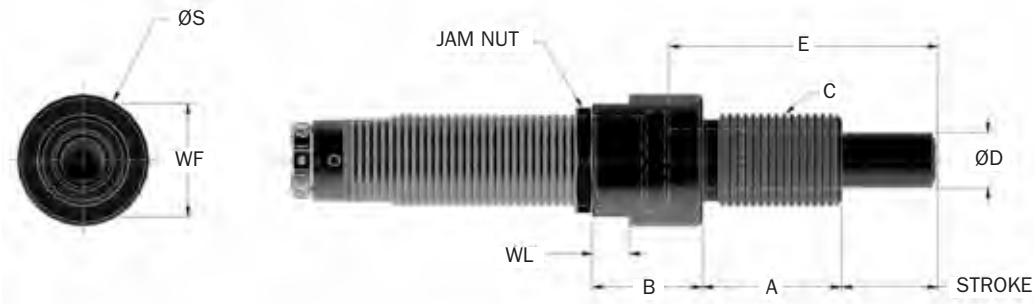

Catalog No./ Model	Part Number	Model Ref	Stroke mm	A mm	B mm	C mm	D mm	E mm	S mm	WF mm	WL mm
SLA 10MF	SLA 33457	ECO OEM 0.1M	6,4	12	11	M10 x 1	5	21,9	13	11	4,0
SLA 12MF	SLA 33299	ECO OEM .15M	10,0	18	14	M12 x 1	6	32,4	16	13	7,0
Δ SLA 14MC	SLA 34756	ECO (LR)OEM .25M	10,0	18	16	M14 x 1,5	8	34,3	18	15	7,0
SLA 16 MC	SLA 34757	ECO (LR)OEM .35M	12,7	20	16	M16 x 1	8	39,2	20	17	7,0
SLA 20 MC	SLA 33262	ECO (LR)OEM .5M	12,7	24	14	M20 x 1,5	11	41,5	25	22	7,0
SLA 25 MF	SLA 33263	ECO (LR)OEM 1.0MF	25,0	38	30	M25 x 1,5	15	73,2	36	32	10,0
SLA 27 MC	SLA 33296	ECO (LR)OEM 1.0M	25,0	38	30	M27 x 3	15	73,2	36	32	10,0

Notes: 1. Maximum sideload angle is 30°.
2. Δ = Non-standard lead time items, contact ITT Enidine.

Clevis Mount

Catalog No./Model	(S) Stroke mm	L mm	M +.010/-.000 mm	N +.010/-.000 mm	P +.000/-.010 mm	Q mm	S mm	V mm	W mm	X mm	Mass g
Δ ECO OEM 1.0M CMS	25	162,1	3,58 +0,13/0	6,02 +0,13/0	9,5 0/-0,3	6,4	31,8	3,2	9,0	6,4	394

Notes: 1. Maximum sideload angle is 30°.
2. Δ = Non-standard lead time items, contact ITT Enidine.

Adjustable Series Hydraulic Shock Absorbers
ECO OEM Small Bore Series

ECO OEM 1.15M → ECO (LR)OEM 1.25M Series

Technical Data

Standard

*Note: A_1 and E_1 apply to urethane striker cap accessory.

Catalog No./ Model	(S) Stroke mm	Optimal Velocity Range m/s	E_T Max. Nm/c	E_TC Max. Nm/hr	F_P Max. Reaction Force N	Nominal Coil Spring Force		F_D Max. Propelling Force N	Mass g
						Extended N	Compressed N		
Δ ECO OEM 1.15M x 1	25,0	0,3-3,30	195,0	75 700	11 120	56,0	89,0	2 220	482
Δ ECO (LR)OEM 1.15M x 1	25,0	0,08-2,0	195,0	75 700	11 120	56,0	89,0	3 335	482
Δ ECO OEM 1.15M x 2	50,0	0,3-3,30	385,0	98 962	11 120	31,0	89,0	2 220	708
Δ ECO (LR)OEM 1.15M x 2	50,0	0,08-2,0	385,0	98 962	11 120	31,0	89,0	3 335	708
ECO OEM 1.25M x 1	25,0	0,3-3,30	195,0	100 000	11 120	56,0	89,0	2 220	567
ECO (LR)OEM 1.25M x 1	25,0	0,08-2,0	195,0	100 000	11 120	56,0	89,0	3 335	567
ECO OEM 1.25M x 2	50,0	0,3-3,30	385,0	111 400	11 120	31,0	89,0	2 220	737
ECO (LR)OEM 1.25M x 2	50,0	0,08-2,0	385,0	111 400	11 120	31,0	89,0	3 335	737

Catalog No./Model	A mm	A_1 mm	C mm	D mm	E mm	E_1 mm	F mm	G mm	H mm	J mm	WF mm	WL mm
Δ ECO (LR)OEM 1.15M x 1	150,0	155,5	M33 x 1,5	9,5	29,0	30,5	97,0	28,0	14,0	5,3	30,0	16,0
Δ ECO (LR)OEM 1.15M x 2	217,0	222,0	M33 x 1,5	9,5	29,0	30,5	138,0	28,0	14,0	5,3	30,0	16,0
ECO (LR)OEM 1.25M x 1	150,0	155,5	M36 x 1,5	9,5	29,0	30,5	97,0	28,0	14,0	5,3	33,0	16,0
ECO (LR)OEM 1.25M x 2	217,0	222,0	M36 x 1,5	9,5	29,0	30,5	138,0	28,0	14,0	5,3	33,0	16,0

Notes: 1. All shock absorbers will function satisfactorily at 5% of their maximum rated energy per cycle. If less than 5%, a smaller model should be specified.
2. For mounting accessories, see pages 25-26.
3. Urethane striker caps are available as accessories for models ECO OEM 1.15M x 1 to ECO OEM 1.25M x 2.
4. Δ = Non-standard lead time items, contact ITT Enidine.

Urethane Striker Cap (USC)

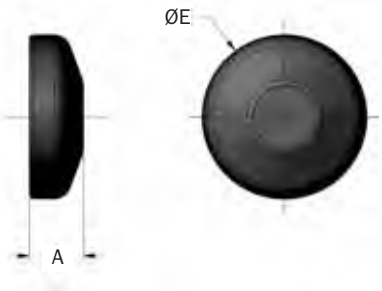

Catalog No./ Model	Part Number	Model Ref	A mm	E mm	Mass g
UC 8609	C98609079	ECO (LR)OEM 1.15/1.25M	10,0	30,5	6

Jam Nut (JN)

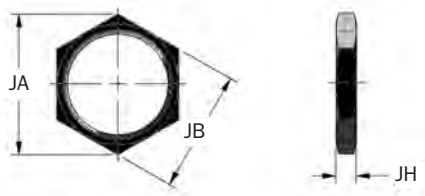

Catalog No./ Model	Part Number	Model Ref	JA mm	JB mm	JH mm	Mass g
JN M33 x 1.5	J224061035	ECO (LR)OEM 1.15M	47,3	41,0	6,4	27
JN M36 x 1.5	J224063035	ECO (LR)OEM 1.25M	47,3	41,0	6,4	27

Stop Collar (SC)

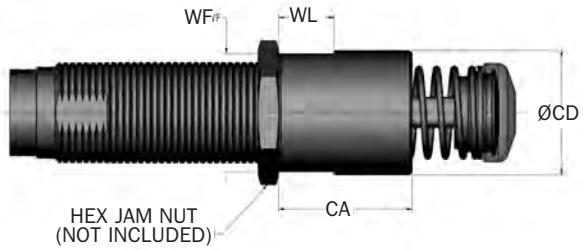

Catalog No./ Model	Part Number	Model Ref	CA mm	CD mm	WF mm	WL mm	Mass g
ΔSC M33 x 1.5	M923865058	ECO OEM 1.15M	41,0	36,0	30,0	17,0	215
ΔSC M36 x 1.5	M924063058	ECO OEM 1.25M	63,5	43,0	41,0	18,0	210
ΔSC M25 x 2 x 1.56	M924129058	HP 110 MC	50,8	38,0	32,0	15,0	215
ΔSC M25 x 1.5 x 1.56	M924129180	HP 110 MF	50,8	38,0	32,0	15,0	215

Notes: 1. *Do not use with urethane striker cap.
2. Δ= Non-standard lead time items, contact ITT Enidine.

Rectangular Flange (RF)

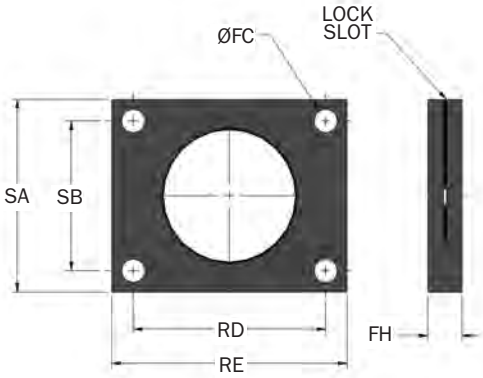

Catalog No./ Model	Part Number	Model Ref	FC mm	FH mm	RD mm	RE mm	SA mm	SB mm	Size mm	Mass g
RF M33 x 1.5	N121049141	ECO (LR)OEM 1.15M	5,5	9,5	41,3	50,8	44,5	28,6	M5	30
RF M36 x 1.5	N121293141	ECO (LR)OEM 1.25M	5,5	9,5	41,3	58,8	44,5	28,6	M5	30

Clevis Mount

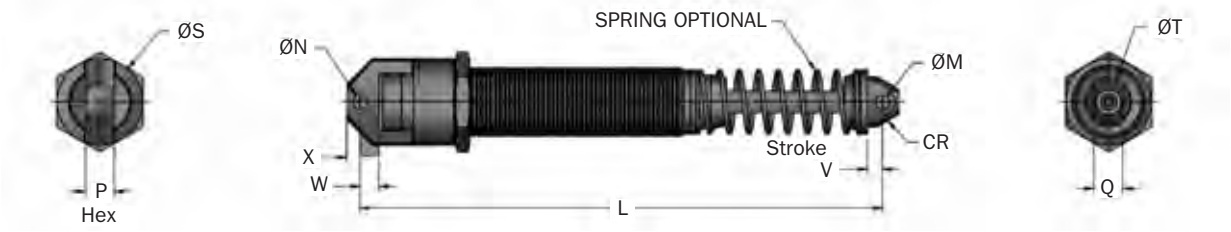

Catalog No./Model	S Stroke mm	L mm	M mm	N mm	P mm	Q mm	S mm	T mm	V mm	W mm	X mm	CR mm	Mass g
ΔECO (LR)OEM 1.15 x 1 CM (S)	25	163,6	6,02 +0,13/0	6,02 +0,13/0	12,7 0/-0,3	12,7 0/-0,3	38,1	22,3	6,0	8,3	6,0	10,0	725
ΔECO (LR)OEM 1.15 x 2 CM (S)	50	230,4	6,02 +0,13/0	6,02 +0,13/0	12,7 0/-0,3	12,7 0/-0,3	38,1	22,3	6,0	8,3	6,0	10,0	861
ΔECO (LR)OEM 1.25 x 1 CM (S)	25	163,6	6,02 +0,13/0	6,02 +0,13/0	12,7 0/-0,3	12,7 0/-0,3	38,1	22,3	6,0	8,3	6,0	10,0	725
ΔECO (LR)OEM 1.25 x 2 CM (S)	50	230,4	6,02 +0,13/0	6,02 +0,13/0	12,7 0/-0,3	12,7 0/-0,3	38,1	22,3	6,0	8,3	6,0	10,0	861

Notes: 1. "S" designates model is supplied with spring.
2. Δ= Non-standard lead time items, contact ITT Enidine.

Flange Foot Mount

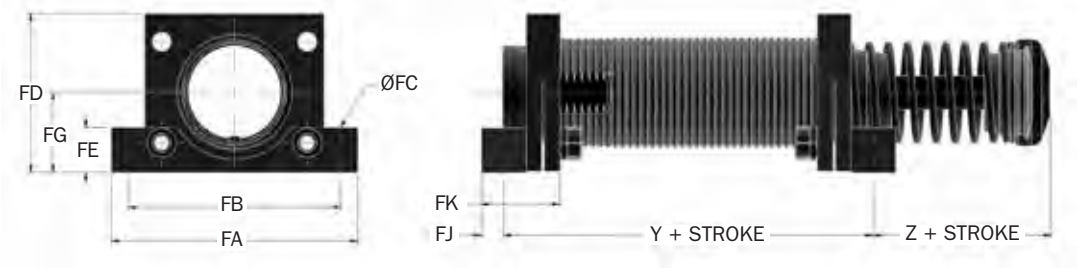

Catalog No./ Model	Part Number	Model Ref	Y mm	Z mm	FA mm	FB mm	FC mm	FD mm	FE mm	FG mm	FJ mm	FK mm	Bolt Size mm	Mass g
FM M33 x 1.5	2F21049306	ECO (LR)OEM 1.15M	56,6	31,8	70,0	60,3	6,0	44,5	12,7	22,7	6,4	22,2	M5	100
FM M36 x 1.5	2F21293306	ECO (LR)OEM 1.25M	56,6	31,8	70,0	60,3	6,0	44,5	12,7	22,7	6,4	22,2	M5	100

Adjustable Series Hydraulic Shock Absorbers

OEMXT Mid-Bore Series

OEMXT 3/4 → (LR)OEMXT 1.5M Series

Technical Data

Standard

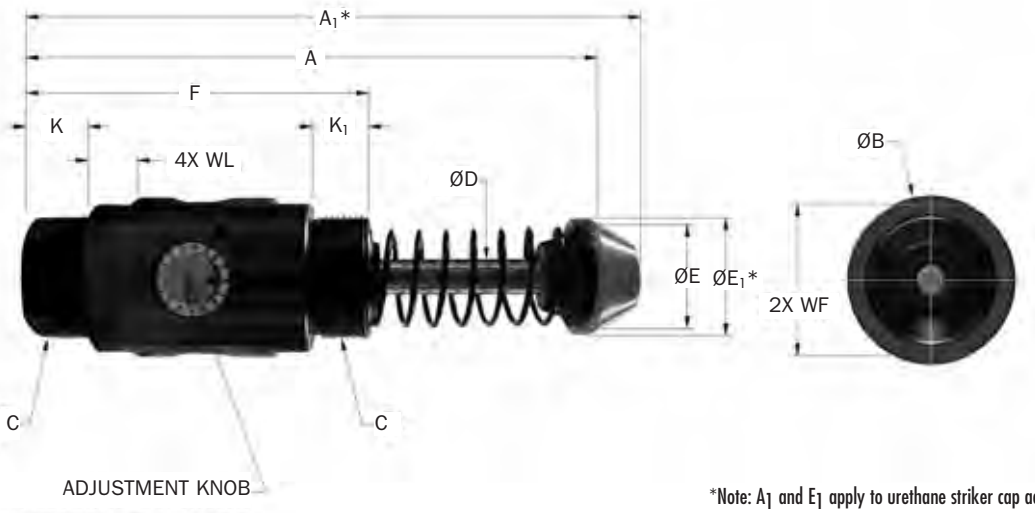

*Note: A_1 and E_1 apply to urethane striker cap accessory.

Catalog No./Model	(S) Stroke mm	Optimal Velocity Range m/s	E_T Max. Nm/c	E_TC Max. Nm/hr	Fp Max. Reaction Force N	Nominal Coil Spring Force		F_D Max. Propelling Force N	Mass Kg
						Extended N	Compressed N		
OEMXT 3/4 x 1	25,0	0,3-3,5	425	126 000	20 000	48	68	2 890	1,2
(LR)OEMXT 3/4 x 1	25,0	0,08-1,3	425	126 000	20 000	48	68	6 660	1,2
OEMXT 3/4 x 2	50,0	0,3-3,5	850	167 000	20 000	29	68	2 890	1,7
(LR)OEMXT 3/4 x 2	50,0	0,08-1,3	850	167 000	20 000	48	85	6 660	1,7
OEMXT 3/4 x 3	75,0	0,3-3,5	1 300	201 000	20 000	29	85	2 890	2,1
OEMXT 1.5M x 1	25,0	0,3-3,5	425	126 000	20 000	48	68	2 890	1,2
(LR)OEMXT 1.5M x 1	25,0	0,08-1,3	425	126 000	20 000	48	68	6 660	1,2
OEMXT 1.5M x 2	50,0	0,3-3,5	850	167 000	20 000	29	68	2 890	1,7
(LR)OEMXT 1.5M x 2	50,0	0,08-1,3	850	167 000	20 000	48	85	6 660	1,7
OEMXT 1.5M x 3	75,0	0,3-3,5	1 300	201 000	20 000	29	85	2 890	2,1

Catalog No./Model	C Thread	A mm	A_1 mm	B mm	D mm	E mm	E_1 mm	F mm	K mm	K_1 mm	WF mm	WL mm
(LR)OEMXT 3/4 x 1	1 3/4 - 12 UN	144	162	58	13	38	44	92	32	32	40,5	19
(LR)OEMXT 3/4 x 2	1 3/4 - 12 UN	195	213	58	13	38	44	118	45	45	40,5	19
(LR)OEMXT 3/4 x 3	1 3/4 - 12 UN	246	264	58	13	38	44	143	57	57	40,5	19
(LR)OEMXT 1.5M x 1	M42 x 1,5	144	162	58	13	38	44	92	32	32	40,5	19
(LR)OEMXT 1.5M x 2	M42 x 1,5	195	213	58	13	38	44	118	45	45	40,5	19
(LR)OEMXT 1.5M x 3	M42 x 1,5	246	264	58	13	38	44	143	57	57	40,5	19

ITT ENGINEERED FOR LIFE

www.enidine.eu Email: info@enidine.eu Tel.: +49 6063 9314 0 Fax: +49 6063 9314 44

Clevis Mount

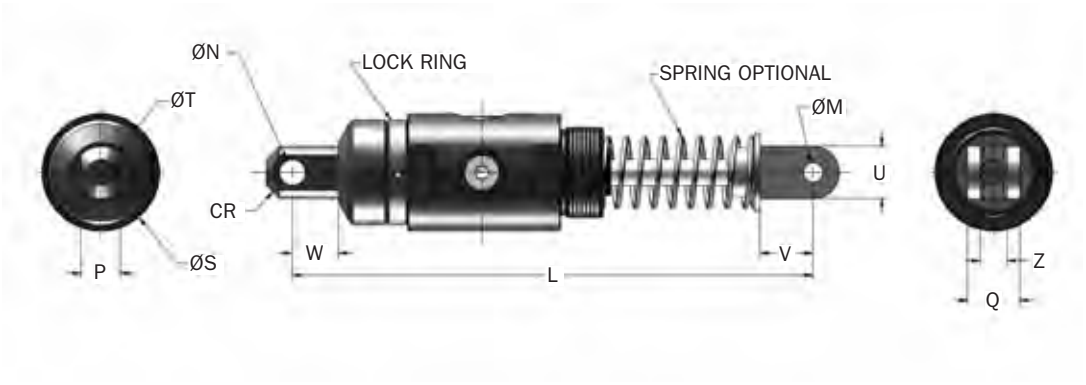

Catalog No./Model	(S) Stroke mm	L mm	M mm	N mm	P mm	Q mm	S mm	T mm	U mm	V mm	W mm	Z mm	CR mm	Mass Kg
Δ(LR)OEMXT 3/4 x 1 CM (S)	25	199,0	9,60	12,70 +0,25/0	19,0 +0,25/0	25,4 0/-0,3	51,0	25,4	25,0	26,0	22,0	12,9	14,3 +0,5/-0	1,59
Δ(LR)OEMXT 1.5M x 1 CM (S)	25	199,0	9,60	12,70 +0,25/0	19,0 +0,25/0	25,4 0/-0,3	51,0	25,4	25,0	26,0	22,0	12,9	14,3 +0,5/-0	1,59
Δ(LR)OEMXT 3/4 x 2 CM (S)	50	250,0	9,60	12,70 +0,25/0	19,0 +0,25/0	25,4 0/-0,3	51,0	25,4	25,0	26,0	22,0	12,9	14,3 +0,5/-0	1,7
Δ(LR)OEMXT 1.5M x 2 CM (S)	50	250,0	9,60	12,70 +0,25/0	19,0 +0,25/0	25,4 0/-0,3	51,0	25,4	25,0	26,0	22,0	12,9	14,3 +0,5/-0	1,7
ΔOEMXT 3/4 x 3 CM (S)	75	300,0	9,60	12,70 +0,25/0	19,0 +0,25/0	25,4 0/-0,3	51,0	25,4	25,0	26,0	22,0	12,9	14,3 +0,5/-0	1,95
ΔOEMXT 1.5M x 3 CM (S)	75	300,0	9,60	12,70 +0,25/0	19,0 +0,25/0	25,4 0/-0,3	51,0	25,4	25,0	26,0	22,0	12,9	14,3 +0,5/-0	1,95

Notes: 1. "S" designates model is supplied with spring.
2. Δ = Non-standard lead time items, contact ITT Enidine.

Flange Foot Mount

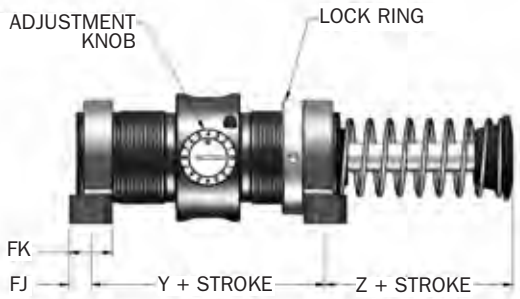

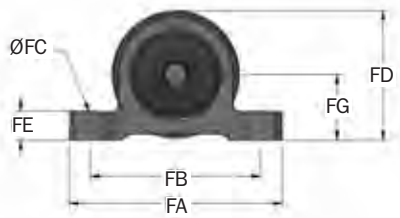

Catalog No./ Model	Part Number	Model Ref	Y mm	Z mm	FA mm	FB mm	FC mm	FD mm	FE mm	FG mm	FJ mm	FK mm	Size mm	Bolt Mass g
FM 1 3/4-12	2FE2940	(LR)OEM 3/4	60,5	26,9	95,3	76,2	8,6	55,0	12,7	29,5	9,7	19,1	M8	370
FM M42 x 1,5	2F2940	(LR)OEM 1.5M	60,5	26,9	95,3	76,2	8,6	55,0	12,7	29,5	9,7	19,1	M8	370

Adjustable Series Hydraulic Shock Absorbers

OEMXT Mid-Bore Series

OEMXT 1 1/8 → (LR)OEMXT 2.0M Series

Technical Data

Standard

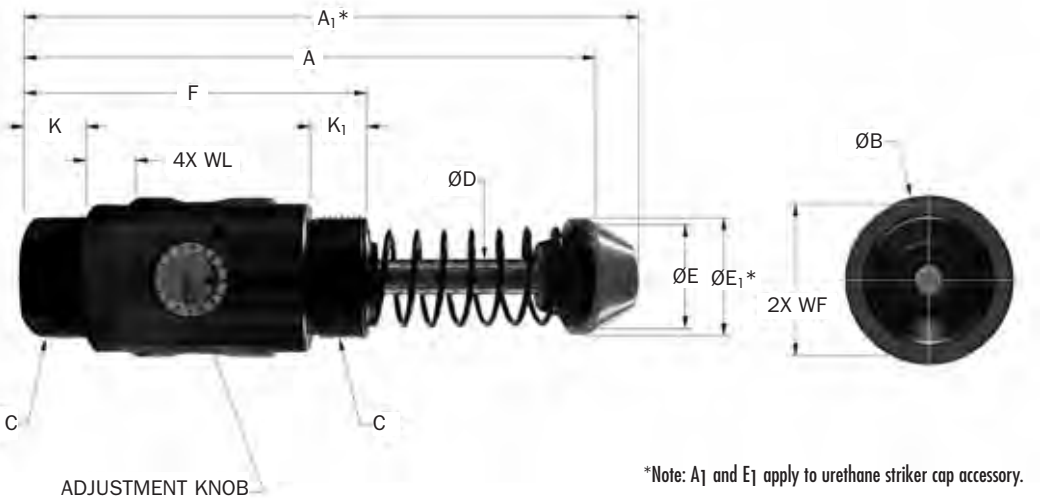

*Note: A_1 and E_1 apply to urethane striker cap accessory.

Catalog No./ Model	(S) Stroke mm	Optimal Velocity Range m/s	E_T Max. Nm/c	E_TC Max. Nm/hr	Fp Max. Reaction Force N	Nominal Coil Spring Force		F_D Max. Propelling Force N	Mass Kg
						Extended N	Compressed N		
Δ LROEMXT 1 1/8 x 1	25,0	0,08-1,35	1 130	226 000	51 000	115	155	17 760	2,1
OEMXT 1 1/8 x 2	50,0	0,3-3,5	2 260	271 000	51 000	75	155	6 660	3,6
LROEMXT 1 1/8 x 2	50,0	0,08-1,35	2 260	271 000	51 000	75	155	17 760	3,6
OEMXT 1 1/8 x 4	100,0	0,3-3,5	4 520	362 000	51 000	70	160	6 660	4,9
OEMXT 1 1/8 x 6	150,0	0,3-3,5	6 780	421 000	51 000	90	284	6 660	6,4
Δ LROEMXT 2.0M x 1	25,0	0,08-1,35	1 130	226 000	51 000	115	155	17 760	2,1
OEMXT 2.0M x 2	50,0	0,3-3,5	2 260	271 000	51 000	75	155	6 660	3,6
LROEMXT 2.0M x 2	50,0	0,08-1,35	2 260	271 000	51 000	75	155	17 760	3,6
OEMXT 2.0M x 4	100,0	0,3-3,5	4 520	362 000	51 000	70	160	6 660	4,9
OEMXT 2.0M x 6	150,0	0,3-3,5	6 780	421 000	51 000	90	284	6 660	6,4

Note: Δ = Non-standard lead time items, contact ITT Enidine.

Catalog No./Model	C	A mm	A_1 mm	B mm	D mm	E mm	E_1 mm	F mm	K mm	K_1 mm	WF mm	WL mm
Δ LROEMXT 1 1/8 x 1	2 1/2 - 12 UN	175	192	77	19	50	57	114	38	38	61,5	19
LROEMXT 1 1/8 x 2	2 1/2 - 12 UN	226	243	77	19	50	57	140	51	51	61,5	19
OEMXT 1 1/8 x 4	2 1/2 -12 UN	328	345	77	19	50	57	191	76	76	61,5	19
OEMXT 1 1/8 x 6	2 1/2 -12 UN	456	473	77	19	50	57	241	76	76	61,5	19
Δ LROEMXT 2.0M x 1	M64 x 2,0	175	192	77	19	50	57	114	38	38	61,5	19
(LR)OEMXT 2.0M x 2	M64 x 2,0	226	243	77	19	50	57	140	51	51	61,5	19
OEMXT 2.0M x 4	M64 x 2,0	328	345	77	19	50	57	191	76	76	61,5	19
OEMXT 2.0M x 6	M64 x 2,0	456	473	77	19	50	57	241	76	76	61,5	19

Note: Δ = Non-standard lead time items, contact ITT Enidine.

ITT ENGINEERED FOR LIFE

www.enidine.eu Email: info@enidine.eu Tel.: +49 6063 9314 0 Fax: +49 6063 9314 44

Clevis Mount

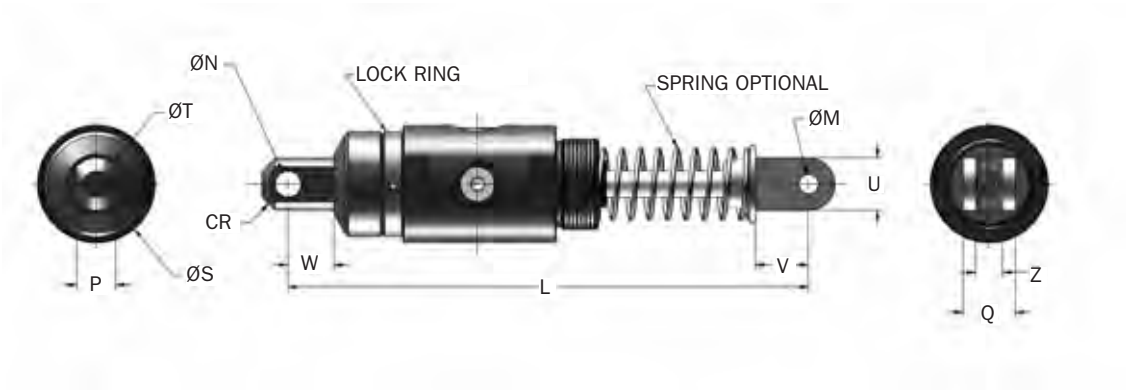

Catalog No./Model	(S) Stroke mm	L mm	M mm	N mm	P mm	Q mm	S mm	T mm	U mm	V mm	W mm	Z mm	CR mm	Mass Kg
Δ (LR)OEMXT 1 1/8 x 2 CM (S)	50	306,0	19,07 +0,25/0	19,07 +0,25/0	31,7 0/-0,3	38,0 +0,5/0,0	73,0	38,0	38,0	36,0	26,0	16,0	23,0	5,30
Δ (LR)OEMXT 2.0M x 2 CM (S)	50	306,0	19,07 +0,25/0	19,07 +0,25/0	31,7 0/-0,3	38,0 +0,5/0,0	73,0	38,0	38,0	36,0	26,0	16,0	23,0	5,30
Δ OEMXT 1 1/8 x 4 CM (S)	100	408,0	19,07 +0,25/0	19,07 +0,25/0	31,7 0/-0,3	38,0 +0,5/0,0	73,0	38,0	38,0	36,0	26,0	16,0	23,0	6,08
Δ OEMXT 2.0M x 4 CM (S)	100	408,0	19,07 +0,25/0	19,07 +0,25/0	31,7 0/-0,3	38,0 +0,5/0,0	73,0	38,0	38,0	36,0	26,0	16,0	23,0	6,08
Δ OEMXT 1 1/8 x 6 CM (S)	150	537,0	19,07 +0,25/0	19,07 +0,25/0	31,7 0/-0,3	38,0 +0,5/0,0	73,0	38,0	38,0	36,0	26,0	16,0	23,0	7,39
Δ OEMXT 2.0M x 6 CM (S)	150	537,0	19,07 +0,25/0	19,07 +0,25/0	31,7 0/-0,3	38,0 +0,5/0,0	73,0	38,0	38,0	36,0	26,0	16,0	23,0	7,39

Notes: 1. "S" designates model is supplied with spring.
2. Δ = Non-standard lead time items, contact ITT Enidine.

Flange Foot Mount

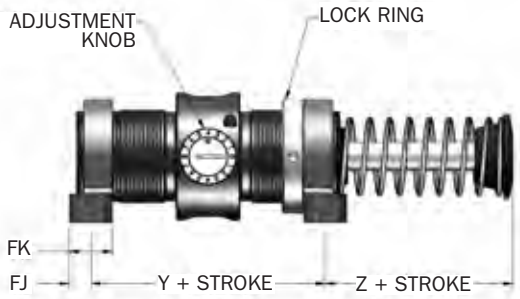

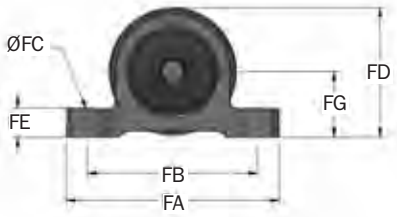

Catalog No./ Model	Part Number	Model Ref	Y mm	Z mm	FA mm	FB mm	FC mm	FD mm	FE mm	FG mm	FJ mm	FK mm	Bolt Size mm	Mass Kg	Notes
FM 2 1/2 x 12	2FE3010	(LR)OEM 1 1/8	76,2	39,6	143,0	124,0	10,4	89,7	16,0	44,5	11,2	22,4	M10	1.08	1
FM M64 x 2	2F3010	(LR)OEM 2.0M	76,2	39,6	143,0	124,0	10,4	89,7	16,0	44,5	11,2	22,4	M10	1.08	2

Notes: 1. OEM 1 1/8 x 6 'Z' dimension is 68,3 mm.
2. OEM 2.0M x 6 'Z' dimension is 68,3 mm.

Adjustable Series Hydraulic Shock Absorbers

OEM Large-Bore Series

OEM 3.0M → OEM 4.0M Series

Technical Data

Standard

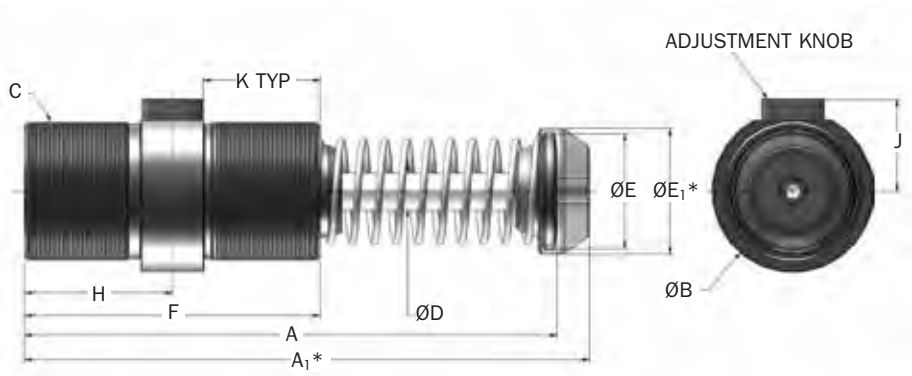

*Note: A_1 and E_1 apply to urethane striker cap accessory.

Catalog No./ Model	(S) Stroke mm	Optimal Velocity Range m/s	E_T Max. Nm/c	E_TC Max. Nm/hr	Fp Max. Reaction Force N	Nominal Coil Spring Force		F_D Max. Propelling Force N	Mass Kg
						Extended N	Compressed N		
OEM 3.0M x 2	50	0,3-4,3	2 300	372 000	67 000	110	200	12 000	7,0
OEM 3.0M x 3.5	90	0,3-4,3	4 000	652 000	67 000	110	200	12 000	9,1
OEM 3.0M x 5	125	0,3-4,3	5 700	933 000	67 000	71	200	12 000	10,9
OEM 3.0M x 6.5	165	0,3-4,3	7 300	1 215 000	67 000	120	330	12 000	13,6
OEM 4.0M x 2	50	0,3-4,3	3 800	1 503 000	111 000	225	290	21 000	15,0
OEM 4.0M x 4	100	0,3-4,3	7 700	1 808 000	111 000	155	290	21 000	18,2
OEM 4.0M x 6	150	0,3-4,3	11 500	2 102 000	111 000	135	310	21 000	20,0
ΔOEM 4.0M x 8	200	0,3-4,3	15 400	2 407 000	111 000	180	355	21 000	30,0
ΔOEM 4.0M x 10	250	0,3-4,3	19 200	2 712 000	111 000	135	355	21 000	33,0

Note: Δ = Non-standard lead time items, contact ITT Enidine.

Catalog No./Model	A mm	A_1 mm	B mm	C	D mm	E mm	E_1 mm	F mm	H mm	J mm	K mm
OEM 3.0M x 2	245	265	98	M85 x 2.0	22	69	76	140	70	58	51
OEM 3.0M x 3.5	323	343	98	M85 x 2.0	22	69	76	179	90	58	71
OEM 3.0M x 5	399	419	98	M85 x 2.0	22	69	76	217	109	58	71
OEM 3.0M x 6.5	494	514	98	M85 x 2.0	22	81	81	256	128	58	71
OEM 4.0M x 2	313	335	127	M115 x 2.0	35	88	95	203	102	74	80
OEM 4.0M x 4	414	436	127	M115 x 2.0	35	88	95	254	127	74	105
OEM 4.0M x 6	516	538	127	M115 x 2.0	35	88	95	305	153	74	108
ΔOEM 4.0M x 8	643	665	127	M115 x 2.0	35	88	95	356	178	74	108
ΔOEM 4.0M x 10	745	767	127	M115 x 2.0	35	88	95	406	203	74	108

Notes: 1. All shock absorbers will function satisfactorily at 5% of their maximum rated energy per cycle. If less than 5%, a smaller model should be specified.
2. For mounting accessories, see pages 32.
3. Rear flange mounting of OEM 3.0M x 6.5, OEM 4.0M x 8 and OEM 4.0M x 10 models not recommended when mounting horizontally.
4. Δ = Non-standard lead time items, contact ITT Enidine.

ITT ENGINEERED FOR LIFE
www.enidine.eu Email: info@enidine.eu Tel.: +49 6063 9314 0 Fax: +49 6063 9314 44

Clevis Mount

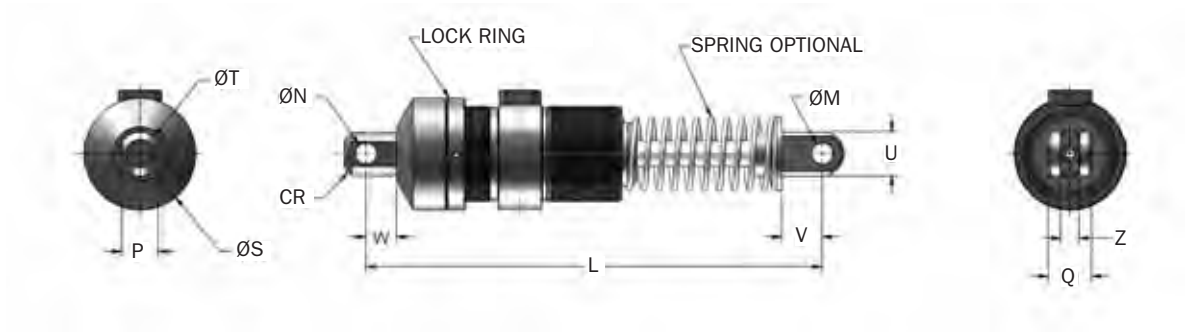

Catalog No./Model	(S) Stroke mm	L mm	M mm	N mm	P mm	Q mm	S mm	T mm	U mm	V mm	W mm	Z mm	CR mm	Mass Kg
ΔOEM 3.0M x 2 CM (S)	50	325,0	19,07 +0,25/0	19,07 +0,25/0	31,7 0/-0,3	38,0	98,0	38,1	38,1	36,0	26,0	16,0 +0,5/0	23,0	8,66
ΔOEM 3.0M x 3.5 CM (S)	90	402,0	19,07 +0,25/0	19,07 +0,25/0	31,7 0/-0,3	38,0	98,0	38,1	38,1	36,0	26,0	16,0 +0,5/0	23,0	10,70
ΔOEM 3.0M x 5 CM (S)	125	479,0	19,07 +0,25/0	19,07 +0,25/0	31,7 0/-0,3	38,0	98,0	38,1	38,1	36,0	26,0	16,0 +0,5/0	23,0	12,52
ΔOEM 3.0M x 6.5 CM (S)	165	574,0	19,07 +0,25/0	19,07 +0,25/0	31,7 0/-0,3	38,0	98,0	38,1	38,1	36,0	26,0	16,0 +0,5/0	23,0	15,24
ΔOEM 4.0M x 2 CM (S)	50	432,0	25,42 +0,25/0	25,42 +0,25/0	38,1 0/-0,3	90,5	127,0	57,2	51,0	51,0	44,0	38,2 +0,5/0	35,0	19,23
ΔOEM 4.0M x 4 CM (S)	100	533,0	25,42 +0,25/0	25,42 +0,25/0	38,1 0/-0,3	90,5	127,0	57,2	51,0	51,0	44,0	38,2 +0,5/0	35,0	22,41
ΔOEM 4.0M x 6 CM (S)	150	635,0	25,42 +0,25/0	25,42 +0,25/0	38,1 0/-0,3	90,5	127,0	57,2	51,0	51,0	44,0	38,2 +0,5/0	35,0	24,22
ΔOEM 4.0M x 8 CM (S)	200	762,0	25,42 +0,25/0	25,42 +0,25/0	38,1 0/-0,3	90,5	127,0	57,2	51,0	51,0	44,0	38,2 +0,5/0	35,0	34,20
ΔOEM 4.0M x 10 CM (S)	250	864,0	25,42 +0,25/0	25,42 +0,25/0	38,1 0/-0,3	90,5	127,0	57,2	51,0	51,0	44,0	38,2 +0,5/0	35,0	37,37

Notes: 1. "S" indicates model is supplied with spring.
2. Δ = Non-standard lead time items, contact ITT Enidine.

Flange Foot Mount

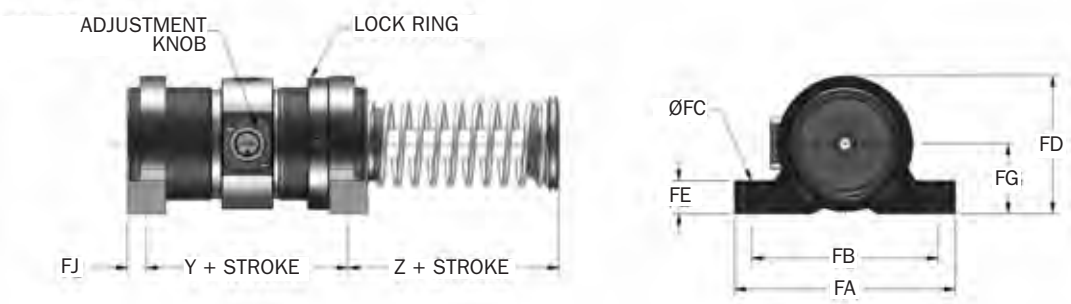

Catalog No./ Model	Part Number	Model Ref	J mm	Y mm	Z mm	FA mm	FB mm	FC mm	FD mm	FE mm	FG mm	FJ mm	FK mm	Bolt Size mm	Mass kg	Notes
FM M85 x 2	2F3330	OEM 3.0M	58	81,0	59,0	165,0	139,7	13,5	103,0	25,4	52,3	14,1	28,7	M12	1 984	1
FM M115 x 2	2F3720	OEM 4.0M	74	190,5	37,0	203,2	165,0	16,8	149,4	38,0	79,5	16,0	50,8	M16	3 900	2

Notes: 1. OEM 3.0M x 6,5, Z dimension is 77,7mm.
2. OEM 4.0M x 8 and 4.0M x 10M, Z dimension is 62,0mm.
3. For rear foot mount, dimension FJ is 22,4mm.

Stop Collar (SC)

(LR)OEMXT ¾ → (LR)OEMXT 2.0M

Catalog No./ Model	Part Number	Model Ref	CA mm	CB mm	CD mm	Mass g
Δ SC M2 ½ - 12*	8KE2940	(LR)OEMXT ¾	49,0	49,0	56,5	340
Δ SC M2 ½ - 12 x 2	8KE3010	(LR)OEMXT 1 ⅛ x 2 & 4	63,0	65,0	76,0	652
Δ SC M2 ½ - 12 x 6	8KE3012	(LR)OEMXT 1 ⅛ x 6	93,0	65,0	76,0	936
Δ SC M42 x 1.5 x 1	8K2940	(LR)OEMXT 1.5M x 1	62,0	49,0	56,0	397
Δ SC M42 x 1.5 x 2	8K2941	(LR)OEMXT 1.5M x 2	75,0	49,0	56,0	539
Δ SC M42 x 1.5 x 3	8K2942	OEMXT 1.5M x 3	87,0	49,0	56,0	652
Δ SC M64 x 2 x 2	M93010057	(LR)OEMXT 2.0M x 2	89,0	65,0	76,0	936
Δ SC M64 x 2 x 4	M93011057	OEMXT 2.0M x 4	114,0	65,0	76,0	1 191
Δ SC M64 x 2 x 6	M93012057	OEMXT 2.0M x 6	143,0	65,0	76,0	1 475

Notes: 1. * Do not use with urethane striker cap.
2. Δ = Non-standard lead time items, contact ITT Enidine.

Lock Ring (LR)

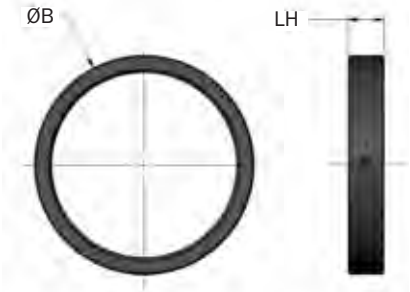

Catalog No./ Model	Part Number	Model Ref	B mm	LH mm	Mass g
LR 1 ¾ - 12	F8E2940049	(LR)OEMXT ¾	50,8	9,6	85
LR 2 ½ - 12	F8E3010049	(LR)OEMXT 1 ⅛	73,0	12,7	114
LR M42 x 1.5	F82940049	(LR)OEMXT 1.5M	50,8	9,6	85
LR M64 x 2	F83010049	(LR)OEMXT 2.0M	73,0	12,7	114
LR M85 x 2	F83330049	(LR)OEM 3.0M	98,2	16,0	226
LR M115 x 2	F83720049	(LR)OEM 4.0M	126,7	22,4	397

Square Flange (SF)

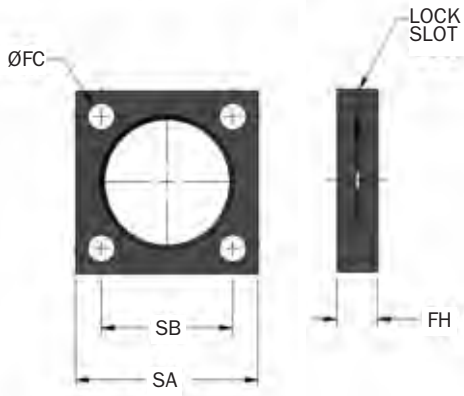

Catalog No./ Model	Part Number	Model Ref	FC mm	FH mm	SA mm	SB mm	Bolt Size mm	Mass g
SF 1 ¾ - 12	M4E2940129	(LR)OEMXT ¾	8,6	12,7	57,2	41,4	M8	140
SF 2 ½ - 12	M4E3010129	(LR)OEMXT 1 ⅛	10,4	15,7	90,0	89,0	M10	570
SF M42 x 1.5	M42940129	(LR)OEMXT 1.5M	8,6	12,7	57,2	41,4	M8	140
SF M64 x 2	M43010141	(LR)OEMXT 2.0M	10,4	15,7	89	69,9	M10	570
SF M85 x 2	M43330141	OEM 3.0M	13,5	19,0	101,6	76,2	M13	680
SF M115 x 2	M43720141	OEM 4.0M	16,5	25,4	139,7	111,3	M16	1 590

Adjustable Series Hydraulic Shock Absorbers
OEMXT Mid-Bore/OEM Large-Bore Accessories

Rectangular Flange (RF)

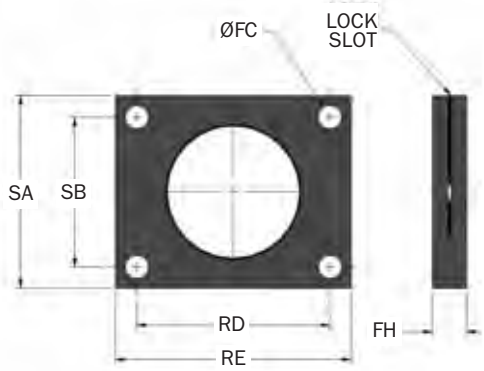

Catalog No./ Model	Part Number	Model Ref	FC mm	FH mm	RD mm	RE mm	SA mm	SB mm	Bolt Size mm	Mass g
RF 1 3/4 -12	M5E2940129	(LR)OEMXT 3/4	8,6	12,7	60,5	76,2	57,2	41,4	M8	260
RF M42 x 1.5	M52940129	(LR)OEMXT 1.5M	8,6	12,7	60,5	76,2	57,2	41,4	M8	260
RF M85 x 2	M53330129	OEM 3.0M	13,5	19,1	101,6	127,0	101,6	76,2	M13	1 040

Stop Bar Kit

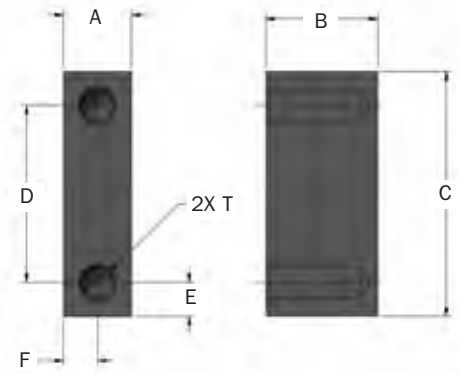

Kit Part Number	Model Ref	A mm	B mm	C mm	D mm	E mm	F mm	T	Bolt Size mm	Mass g
ΔT52940300	OEMXT 3/4	16,0	26,2	57,2	41,4	7,98,1	5/16 - 24	UNF x 18 mm DEEP	5/16	173
ΔT53010300	OEMXT 1 1/8	12,7	36,1	88,9	69,9	9,78,1	3/8 - 24	UNF x 18 mm DEEP	3/8	298

Notes: 1. Kit includes 2 Stop Bars, Rectangular Flange for OEMXT 3/4 and 1.5M, Square Flange for 1 1/8 and 2.0M and Lock Ring.
2. Δ = Non-standard lead time items, contact ITT Enidine.

Urethane Striker Cap (UC)

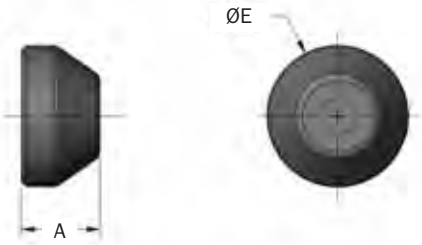

Catalog No./ Model	Part Number	Model Ref	A mm	E_1 mm	Mass g
UC 2940	C92940079	(LR)OEMXT 3/4	24,5	44,5	14
UC 3010	C93010079	(LR)OEMXT 1 1/8	24,1	57,0	23
UC 2940	C92940079	(LR)OEMXT 1.5M	24,5	44,5	14
UC 3010	C93010079	(LR)OEMXT 2.0M	24,1	57,0	23
UC 3330	C93330079	OEM 3.0M	31,4	76,0	85
UC 3720	C93720079	OEM 4.0M	37,5	95,0	170

Note: For complete shock absorber dimension with urethane striker cap, refer to engineering data, pages 27-31.

Stop Collar With Flange (SCF)

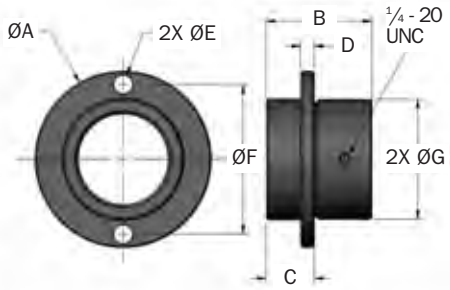

Catalog No./ Model	Part Number	Model Ref	A mm	B mm	C ±.002 mm	D mm	E mm	F mm	G mm	Bolt Size mm	Mass g
ΔSCF 1 3/4 -12	M98640300	OEMXT 3/4	83	49,3	22,4	6,4	8,6	70	56	8	638
ΔSCF 2 1/2 -12	M98650300	OEMXT 1 1/8	108	63	25,4	9,7	8,6	89	75	8	1 238

Notes: 1. Locking set screw feature provided as standard.
2. Δ = Non-standard lead time items, contact ITT Enidine.

Adjustable Series Hydraulic Shock Absorbers

ECO OEM/OEMXT/OEM Large Bore Series

Adjustment Techniques

After properly sizing the shock absorber, the useable range of adjustment settings for the application can be determined:

1. Locate the intersection point of the application's impact velocity and the selected model graph line.
2. The intersection is the **maximum** adjustment setting to be used. Adjustments **exceeding this maximum suggested setting could overload the shock absorber.**
3. The useable adjustment setting range is from the 0 setting to the **maximum** adjustment setting as determined in step 2.

Example: OEM 1.25M x 1

1. Impact Velocity: 1,0 m/s
2. Intersection Point: Adjustment Setting 5
3. Useable Adjustment: Setting Range 0 to 5

Example: (LR)OEMXT 2.0M x 2

1. Impact Velocity: .5 m/s
2. Intersection Point: Adjustment Setting 3
3. Useable Adjustment: Setting Range 0 to 3

Useable Adjustment Setting Range

Position 0 provides minimum damping force.
Position 8 provides maximum damping force.

OEMXT Large

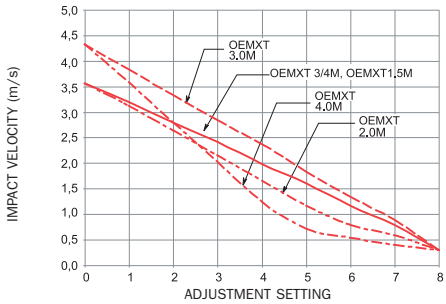

180° adjustment with setscrew locking. OEMXT 3.0M – OEM 4.0M

360° adjustment with setscrew locking. OEMXT 1.5M and OEMXT 2.0M

(LR)OEMXT Large

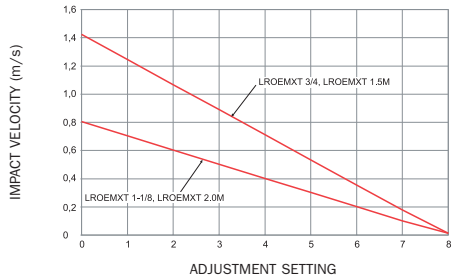

360° adjustment with setscrew locking
(LR)OEMXT 1.5M and (LR)OEMXT 2.0M

ECO OEM Small Series

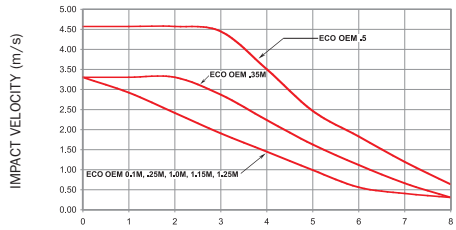

ADJUSTMENT SETTING
(For impact velocities below 0,3 m/s, consult factory)

180° adjustment with setscrew locking
ECO OEM 0.1M - ECO OEM 0.5M

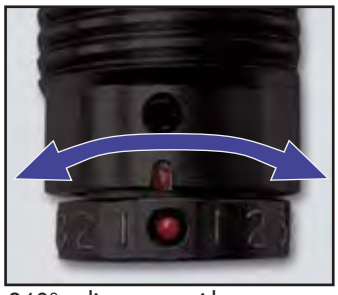

360° adjustment with setscrew locking
ECO OEM 1.0M

ECO (LR)OEM Small Series

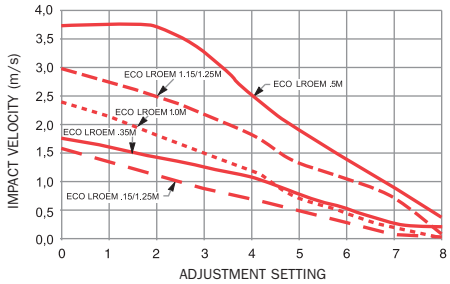

180° adjustment with setscrew locking
ECO (LR)OEM 0.15M - ECO (LR)OEM 0.5M

360° adjustment with setscrew locking
ECO (LR)OEM 1.0M

ITT ENGINEERED FOR LIFE
www.enidine.eu Email: info@enidine.eu Tel.: +49 6063 9314 0 Fax: +49 6063 9314 44

Typical Applications

Automotive Manufacturing Applications

Bottling Applications

Automation/Sorting Applications

Non-Adjustable Series Hydraulic Shock Absorbers

TK Micro-Bore Series, STH Series

ITT Enidine non-adjustable micro-bore hydraulic shock absorbers can accommodate varying energy conditions. This family of tamperproof shock absorbers provides consistent performance, cycle after cycle. Non-adjustable models are designed to absorb maximum energy within a compact envelope size.

The **TK Series** is a versatile, miniature design which provides effective, reliable deceleration and vibration control for light loads. Models can accommodate a wide range of operating conditions.

The ITT Enidine **STH Series** offers the highest energy absorption capacity relative to its size. These custom-orificed shock absorbers are designed to meet exact application requirements. STH Series shock absorbers are available in fully threaded cylinder bodies, providing flexibility in mounting configurations.

Features and Benefits

- Extensive non-adjustable product line offers flexibility in both size and energy absorption capacity to fulfill a wide range of application requirements.
- Tamperproof design ensures repeatable performance.
- Special materials and finishes can be designed to meet specific customer requirements.
- Incorporating optional fluids and seal packages can expand the standard operating temperature range from (–10°C to 80°C) to (–30°C to 100°C).
- Threaded cylinders provide mounting flexibility and increase surface area for improved heat dissipation.
- A select variety of surface finishes maintains original quality appearance and provides the longest corrosion resistance protection.
- ISO quality standards result in reliable, long-life operation.

ITT ENGINEERED FOR LIFE
www.enidine.eu Email: info@enidine.eu Tel.: +49 6063 9314 0 Fax: +49 6063 9314 44

Non-Adjustable Series Hydraulic Shock Absorbers

TK Micro-Bore Series, STH Series

ITT Enidine Non-Adjustable Single-Orifice Shock Absorbers

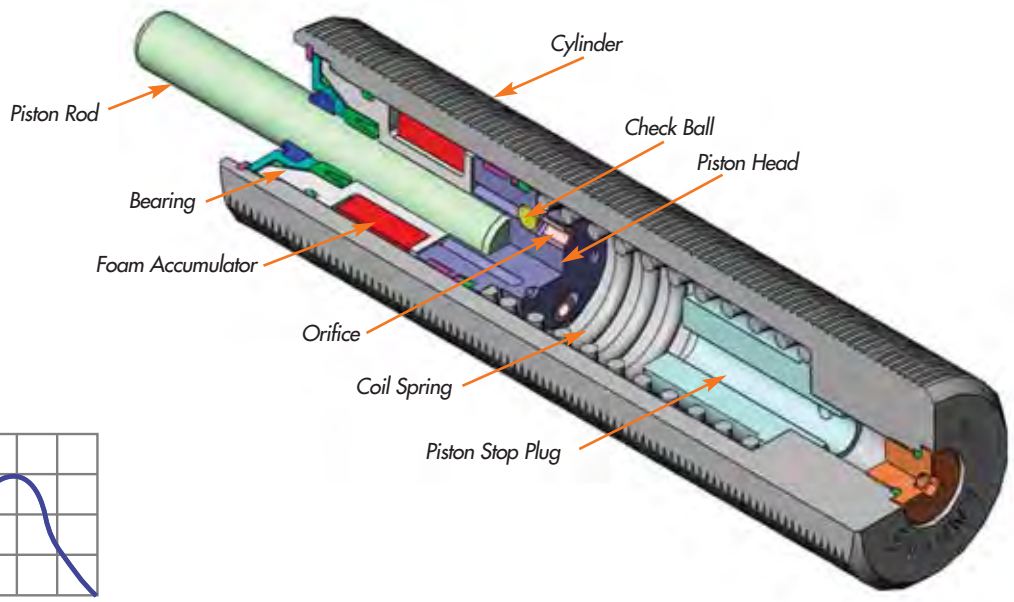

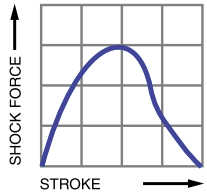

Constant orifice area damping (dashpot) provides the largest shock force at the beginning of the stroke when impact velocity is highest. These shock absorbers provide high-energy absorption in a small, economical design.

The internal structure of a single orifice shock absorber is shown above. When a force is applied to the piston rod, the check ball is seated and the valve remains closed. Oil is forced through the orifice, creating internal pressure allowing smooth, controlled deceleration of the moving load. When the load is removed, the compressed coil spring moves to reposition the piston head, the check ball unseats, opening the valve that permits rapid return of the piston head rod to the original extended position.

The closed cellular foam accumulator is compressed by the oil during the stroke, compensating for fluid displaced by the piston rod during compression. Without the fluid displacement volume provided by the foam accumulator, the closed system would be hydraulically locked.

Single-orifice shock absorbers provide constant orifice area (dashpot) damping.

Non-Adjustable Series Hydraulic Shock Absorbers

TK Micro-Bore Series

TK 6M, TK 8M Series

Standard

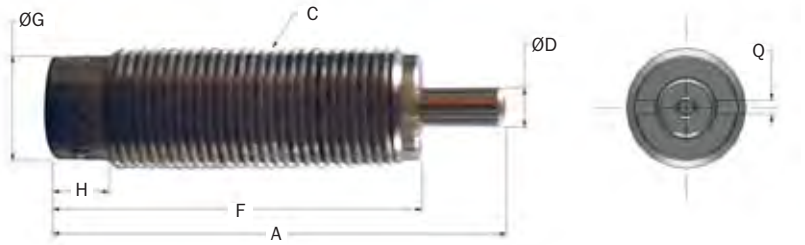

Catalog No./ Model	Bore Size mm	S Stroke mm	E_T Max. Nm/c	E_TC Max. N/hr	F_P Max. Reaction Force N	Nominal Coil Reaction Force Extended N	Nominal Coil Reaction Force Compressed N	Mass g
TK 6M	4,2	4,0	1,0	3 600	360	1,0	3,5	4
TK 8M	4,2	4,0	1,0	4 800	360	1,0	3,5	6

Catalog No./ Model	Damping Constant	A mm	C	D mm	F mm	G mm	H mm	Q mm
TK 6M	-1, -2, -3	29,0	M6 x 0,5	2,0	25,0	5,0	4,0	1,0
TK 8M	-1, -2, -3	29,0	M8 x 1,0	2,0	25,0	6,4	4,0	1,0

Note: Dash numbers in page color are non-standard lead time items, contact ITT Enidine.

TK 6M/TK 8M

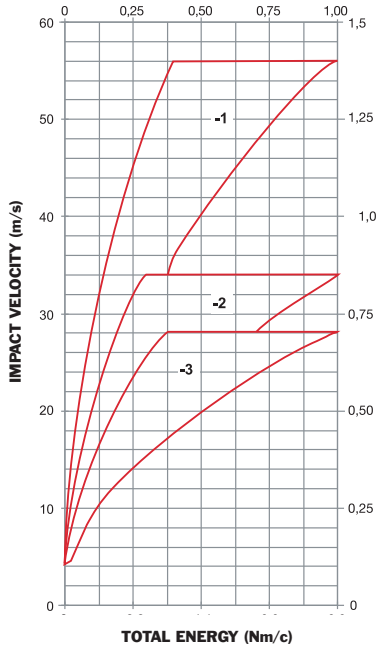

ITT
ENGINEERED FOR LIFE
www.enidine.eu Email: info@enidine.eu Tel.: +49 6063 9314 0 Fax: +49 6063 9314 44

Non-Adjustable Series Hydraulic Shock Absorbers

TK Micro-Bore Series

TK 10M Series

Technical Data

Standard

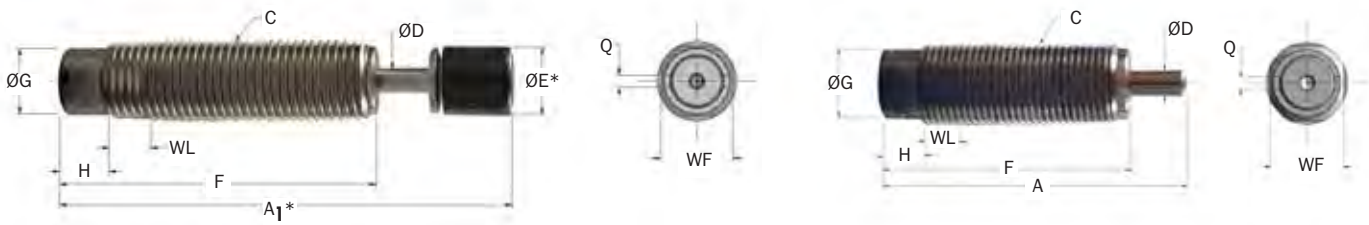

*Note: A_1 and E apply to button models and urethane striker cap accessory.

Catalog No./ Model	S Stroke mm	E_T Max. Nm/c	E_TC Max. Nm/hr	F_P Max. Reaction Force N	Nominal Coil Spring Force		F_D Max. Propelling Force N	Mass g
					Extended N	Compressed N		
TK 10M (B)	6,4	6,0	13 000	1 400	1,5	10,0	–	17

Catalog No./ Model	Damping Constant	A mm	A_1 mm	C	D mm	E mm	F mm	G mm	H mm	Q mm	WF mm	WL mm	S Stroke mm
Δ TK 10M (B)	-1 to -9	44,6	54,4	M10 x 1,0	3,1	8,5	38,0	8,3	5,0	1,5	9,0	4,0	6,4

Notes: 1. Δ = Non-standard lead time items, contact ITT Enidine.
2. (B) indicates button model of shock absorber.

TK 10M

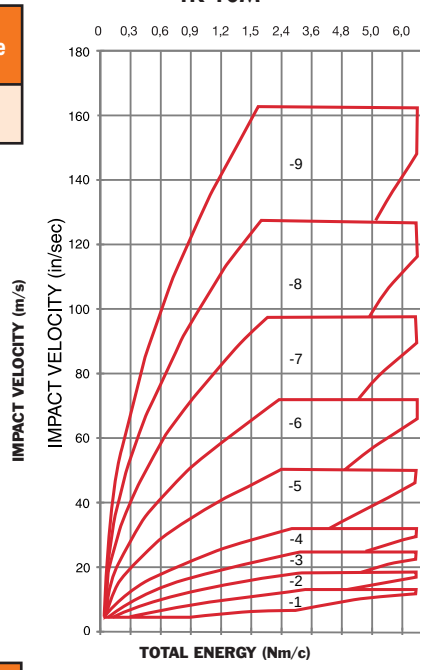

TK 21M Series

Standard

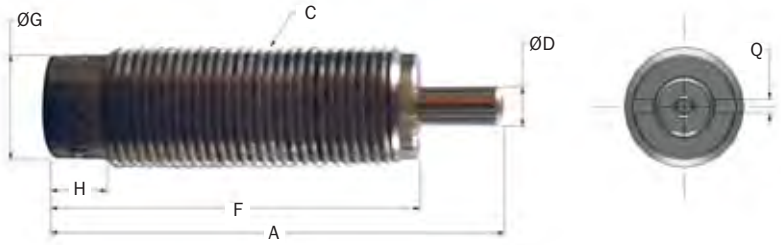

*Note: A_1 and E apply to button models and urethane striker cap accessory.

Catalog No./ Model	S Stroke mm	E_T Max. Nm/c	E_TC Max. Nm/hr	F_P Max. Reaction Force N	Nominal Coil Spring Force		F_D Max. Propelling Force N	Mass g
					Extended N	Compressed N		
TK 21M	6,4	2,2	4 100	700	2,9	5,0	89	12

Catalog No./ Model	Damping Constant	A mm	C	D mm	F mm	G mm	H mm	Q mm
TK 21M	-1, -2, -3	35,4	M10 x 1,0	3,1	28,7	8,2	4,4	1,2

Note: A positive stop is required to prevent the bottoming of the TK 21M shock absorber.

TK 21M

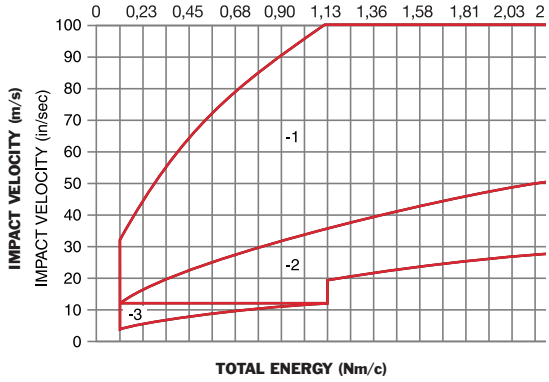

Custom Orificed Products

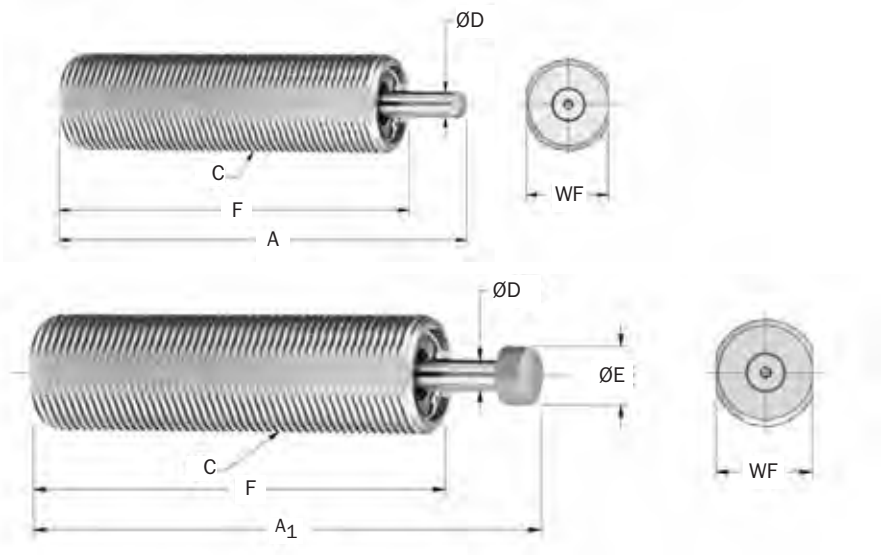

Catalog No./ Model	S Stroke mm	E_T Max. Nm/c	E_TC Max. Nm/hr	F_P Max. Reaction Force N	Nominal Coil Spring Force		Mass g
					Extended N	Compressed N	
Δ STH .25M	6,0	11	4 420	2 730	11	18	79
Δ STH .5M	12,5	65	44 200	8 000	18	31	218
Δ STH .75M	19,0	245	88 400	19 600	35	90	500
Δ STH 1.0M	25,0	500	147 000	29 800	98	235	726
Δ STH 1.0M x 2	50,0	1 000	235 000	29 800	66	133	862
Δ STH 1.5M x 1	25,0	1 150	250 000	65 000	90	227	1 400
Δ STH 1.5M x 2	50,0	2 300	360 000	65 000	56	227	1 800

Notes: 1. Custom orificed application data needed.
2. All shock absorbers will function at 5% of their rated energy per cycle. If less than 5%, a smaller model should be specified.
3. ITT Enidine recommends a positive stop to prevent bottoming of the shock absorber.
4. Δ = Non-standard lead time items, contact ITT Enidine.

Catalog No./ Model	A mm	A_1 mm	C	D mm	E mm	F mm	WF
Δ STH .25M	–	71,0	M14 x 1,0	4,8	12,7	51,0	13,0
Δ STH .5M	–	89,0	M22 x 1,5	5,6	9,5	68,5	20,0
Δ STH .75M	–	130,0	M30 x 2,0	8,0	14,3	103,0	27,0
Δ STH 1.0M	–	170,0	M36 x 1,5	9,5	17,5	136,5	32,0
Δ STH 1.0M x 2	–	238,2	M36 x 1,5	9,5	17,5	178,3	32,0
Δ STH 1.5M x 1	180,0	–	M45 x 1,5	16,0	–	154,0	42,0
Δ STH 1.5M x 2	270,0	–	M45 x 1,5	16,0	–	219,0	42,0

Non-Adjustable Series Hydraulic Shock Absorbers

TK Micro-Bore Series, STH Series

TK 10M → STH 1.5M x 2 Series

Jam Nut (JN)

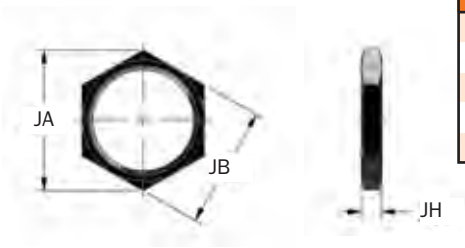

Catalog No./ Model	Part Number	Model Ref	JA mm	JB mm	JH mm	Mass g
JN M10 x 1	J24421167	TK10M/TK21M	15,0	13,0	3,2	2,8
JN M14 X 1	J24950035	STH .25M	19,7	17,0	4,0	3
JN M22 X 1.5	J26402167	STH .5M	31,5	27,0	5,5	12
JN M30 X 2	J30583167	STH .75M	41,6	36,0	7,0	26
JN M36 X 1.5	J23164035	STH 1.0M	41,6	36,0	7,0	26

Lock Ring (LR)

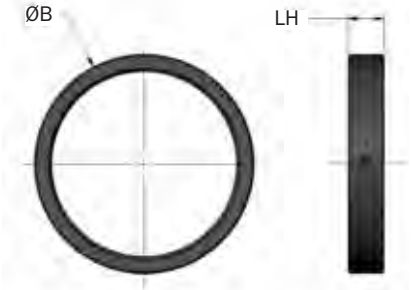

Catalog No./ Model	Part Number	Model Ref	B mm	LH mm	Mass g
LR M45 x 1.5	F88637049	STH 1.5 Series	57,2	9,5	75

Square Flange (SF)

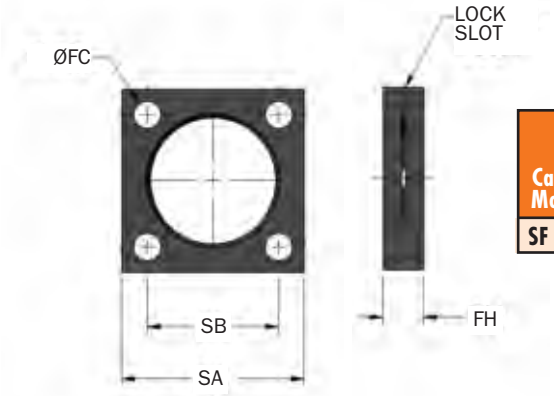

Catalog No./ Model	Part Number	Model Ref	FC mm	FH mm	SA mm	SB mm	Bolt Size mm	Mass g
SF M45 X 1.5	M48637129	STH 1.5 Series	8,6	12,7	57,2	41,3	M8	142

Side Load Adapter (SLA)

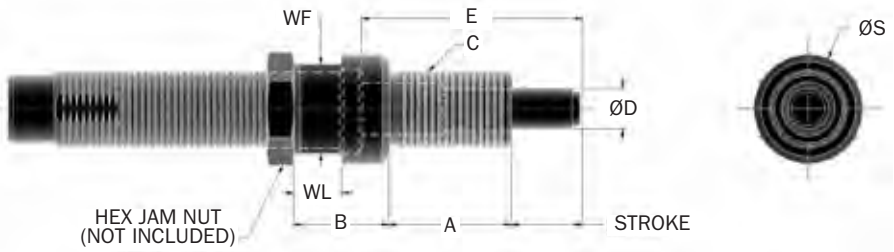

Catalog No./ Model	Part Number	Model Ref	Stroke mm	A mm	B mm	C	D mm	E mm	S mm	WF mm	WL mm
Δ SLA 10MF	SLA 33457	TK 10M/TK 21M	6,9	12	11	M10 x 1	5,0	21,6	13,0	11,0	4,0

Notes: 1. Maximum sideload angle is 30°.
2. Δ = Non-standard lead time items, contact ITT Enidine.

Rectangular Flange (RF)

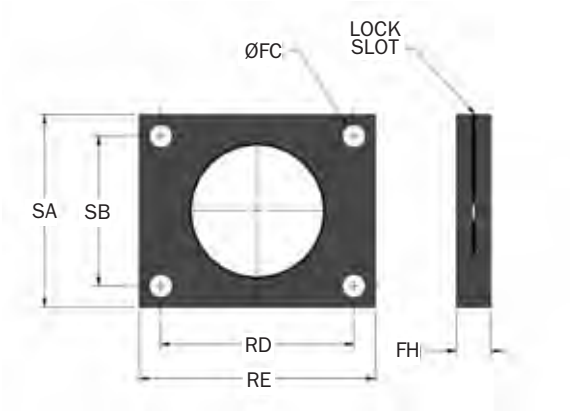

Catalog No./ Model	Part Number	Model Ref	A mm	FC mm	FH mm	RD mm	RE mm	SA mm	SB mm	Bolt Size mm	Mass g
RF M45 x 1.5	M58637053	STH 1.5 Series	M45 x 1,5	8,6	12,7	60,5	76,2	57,2	41,3	M8	255

Universal Retaining Flange (UF)

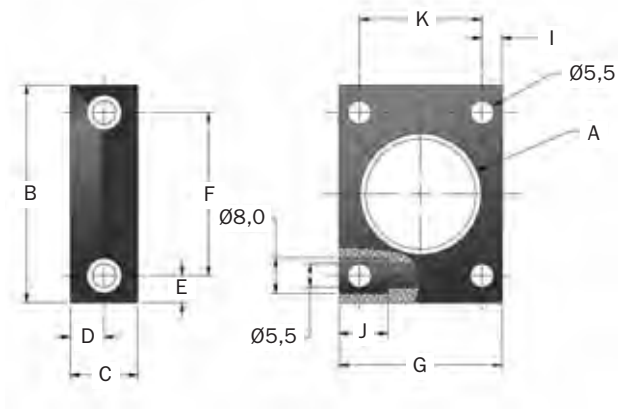

Catalog No./ Model	Part Number	Model Ref	A	B mm	C mm	D mm	E mm	F mm	G mm	H mm	J mm
UF M10 x 1	U16363189	TK 10M(B)/TK21M	M10 x 1	38,0	12,0	6,0	6,25	25,5	25	12,5	5

Note: All dimensions in millimeters.

ITT
ENGINEERED FOR LIFE
www.enidine.eu Email: info@enidine.eu Tel.: +49 6063 9314 0 Fax: +49 6063 9314 44

Typical Applications

Packaging

Mecical Devices

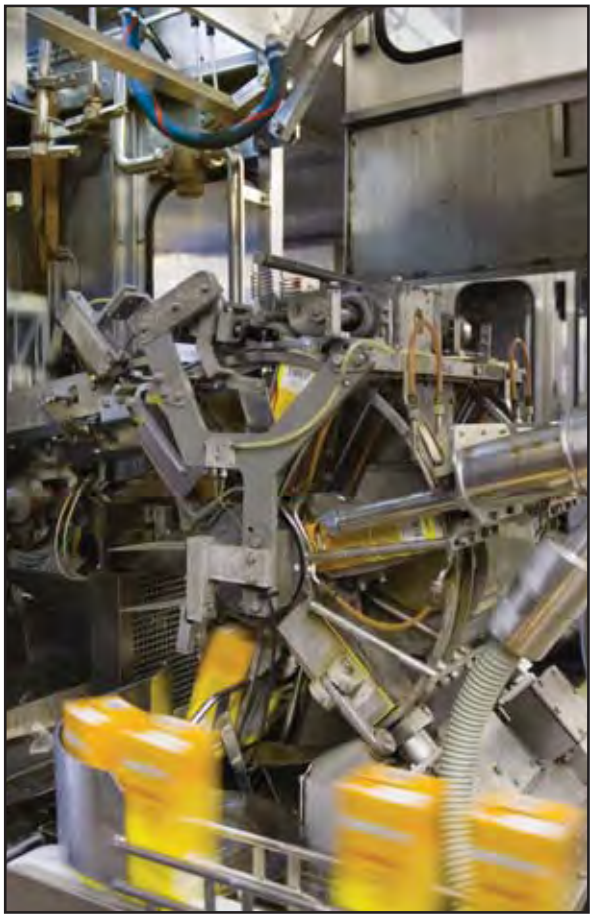

High Speed Automation

Non-Adjustable Series Hydraulic Shock Absorbers
ECO Series

Overview

ECO Series

RoHS COMPLIANT

ITT Enidine's **New ECO Series** non-adjustable hydraulic shock absorbers can accommodate varying energy conditions. This family of tamperproof shock absorbers provides consistent performance, cycle after cycle. Non-adjustable models are designed to absorb maximum energy within a compact envelope size.

The **New ECO Series** was designed using materials and fluids that are safe for our environment. Models can accommodate a wide range of operating conditions with varying masses or propelling forces. The **New ECO Series** offers a flexible design to accomodate a wide variety of application parameters. Whether your application has a low velocity/high drive force or high velocity/low drive force condition, the **New ECO Series** will deliver the performance that you have come to expect.

Features and Benefits

- **Extensive non-adjustable product line** offers flexibility in both size and energy absorption capacity to fulfill a wide range of application requirements.
- **Environmentally friendly materials:**
  - RoHS Compliant materials
  - Bio-degradable hydraulic oil
  - Recyclable packaging materials
- **Introducing our new Enicote II surface finish:**
  - RoHS Compliant
  - Rated at 350 hours salt spray corrosion protection
- **Jam Nut included** with every shock absorber.
- **ISO quality standards** result in reliable, long-life operation.
- **Tamperproof design** ensures repeatable performance.
- **Threaded cylinders provide mounting flexibility** and increase surface area for improved heat dissipation.
- **Wrench flats** promote ease of mounting
- **Capability to mount into pressure chambers**
- **Integrated positive stopping capabilities** up to 7 bar.
- **Special materials and finishes** can be designed to meet specific customer requirements
  - Optional fluids and seal packages can expand the standard operating temperature range from (–10°C to 80°C) to (–35°C to 100°C).
  - Food grade options available
- **Custom orificed (CBECO)** can be engineered to meet specific application requirements or emergency impact only requirements.

ITT ENGINEERED FOR LIFE
www.enidine.eu Email: info@enidine.eu Tel.: +49 6063 9314 0 Fax: +49 6063 9314 44

ITT Enidine Non-Adjustable Multiple Orifice Shock Absorbers

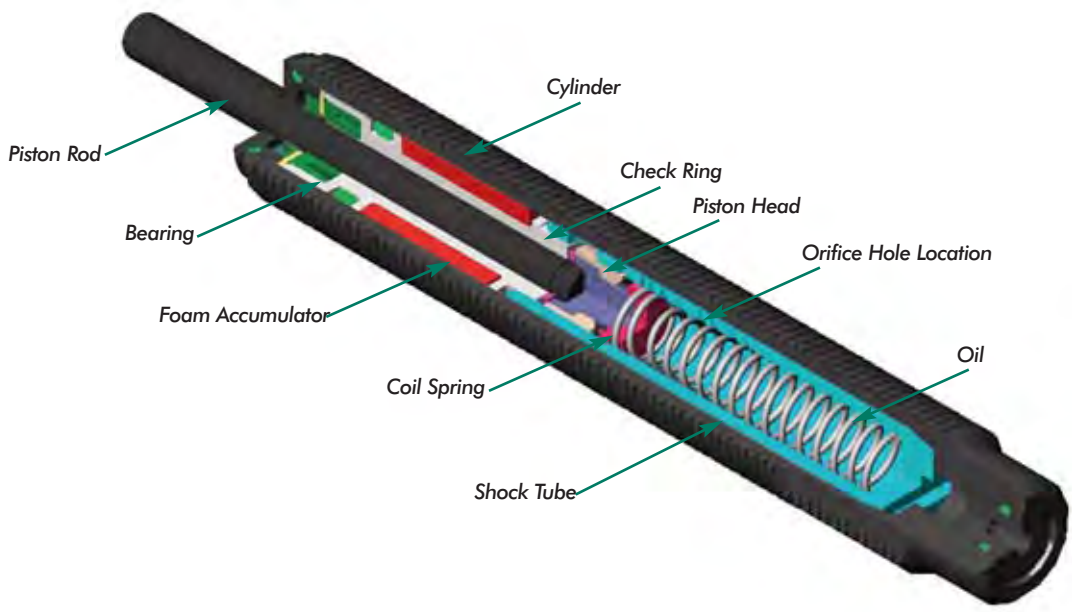

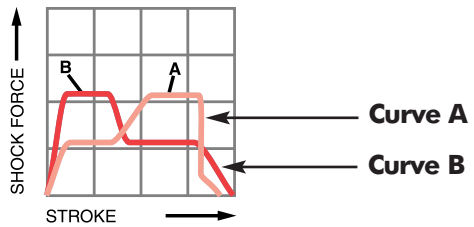

Self-compensating damping maintains acceptable deceleration with conventional type damping characteristics. Self-compensating shock absorbers operate over a wide range of weights and velocities. These shock absorbers are well suited for high drive force, low velocity applications, and where energy conditions may change. **Curve A** shows the *shock force vs. stroke* curve of a self-compensating shock absorber impacted with a low velocity and high drive force. **Curve B** shows the *shock force vs. stroke* curve of a self-compensating shock absorber impacted with a high velocity and low drive force.

The design of a multi-orifice shock absorber features a double cylinder arrangement with space between the concentric shock tube and cylinder, and a series of orifice holes drilled down the length of the shock tube wall.

During piston movement, the check ring is seated and oil is forced through the orifices in the shock tube wall, into the closed cellular foam accumulator and behind the piston head.

As the piston head moves it closes off orifice holes, thus reducing the available orifice area in proportion to the velocity. After the load is removed the coil spring pushes the piston rod outward. This unseats the check ring and permits the oil to flow from the accumulator and across the piston head, back into the shock tube. This allows quick repositioning for the next impact.

Low Pressure multiple orifice shock absorbers can provide progressive or self-compensating damping, depending on the impact conditions.

Non-Adjustable Series Hydraulic Shock Absorbers
ECO Series

Technical Data

Standard
ECO 8 → ECO 100 Series

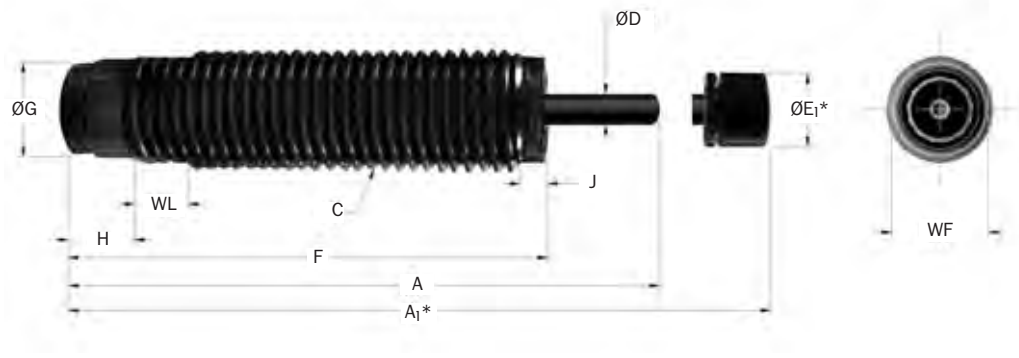

*Note: A_1 and E_1 apply to button models and urethane striker cap accessory. One Hex Jam Nut included with every shock absorber.

Catalog No./ Model	(S) Stroke mm	(E_T) Max. Nm/cycle	(E_TE) Emergency Max. Nm/cycle*	(E_TC) Max. Nm/h	(F_P) Max. Reaction N	Nominal Coil Spring Force		(F_D) Max. Propelling N	Mass g
						Extended N	Compressed N		
ECO 8 (B)	6,4	4,0	–	6 215	890	2,7	5,6	200	16
ECO 10 (B)	7,0	7,0	–	13 640	1 600	2,2	4,5	350	28
ECO 15 (B)	10,4	12,0	25	31 020	2 000	3,0	7,0	220	56
ECO S 25 (B)	12,7	24,0	44	37 400	2 800	4,5	11,0	890	68
ECO 25 (B)	16,0	30,0	56	44 000	2 800	4,5	11,0	890	68
ECO S 50 (B)	12,7	32,0	63	49 720	3 750	6,0	15,0	1 600	123
ECO 50 (B)	22,0	62,0	110	59 070	3 750	8,9	30,0	1 600	136
ECO 100 (B)	25,0	105,0	250	77 000	5 500	13,0	27,0	2 200	297

*Note: Maximum energy rating for emergency use only. Estimated cycle life of 1-5 cycles if used at maximum emergency rating.

Catalog No./ Model	Damping Constant	A mm	A_1 mm	C mm	D mm	E_1 mm	F mm	G mm	H mm	J mm	WF mm	WL mm
ECO 8 MF (B) ECO 8 MC (B)	-1,-2,-3 -1,-2,-3	47,0	57,0	M8 x 0,75 M8 x 1,0	2,5	6,8	40,9	6,6	4,6	2,5	–	–
ECO 10 MF (B)	-1,-2,-3	54,0	64,0	M10 x 1,0	3,0	8,6	46,5	8,6	4,6	3,3	–	–
ECO 15 MF(B)	-1,-2,-3,-4	62,2	72,4	M12 x 1,0	3,0	10,2	52,1	9,9	6,9	2,5	11,0	9,5
ECO S 25 MF (B) ECO S 25 MC (B)	-1,-2,-3 -1,-2,-3	82,7	92,2	M14 x 1,0 M14 x 1,5	4,0	11,2	69,5	10,9	5,1	1,0	12,0	12,7
ECO 25 MF (B) ECO 25 MC (B)	-1,-2,-3,-4 -1,-2,-3,-4	97,5	107,2	M14 x 1,0 M14 x 1,5	4,0	11,2	81,3	10,9	7,6	1,0	12,0	12,7
ECO S 50 MC (B) ECO 50 MC (B)	-1,-2,-3 -1,-2,-3,-4	87,9 118,4	99,9 130,3	M20 x 1,5 M20 x 1,5	4,8 4,8	12,7 12,7	74,4 95,5	16,3 16,3	7,6 7,6	1,0 1,0	18,0 18,0	12,7 12,7
ECO 100 MF (B) ECO 100 MC (B)	-1,-2,-3,-4 -1,-2,-3,-4	128,8	141,5	M25 x 1,5 M27 x 3,0	6,4	15,7	102,6	22,0	12,7	4,6	23,0	12,7

Note: 1. See page 54-55 for constant damping curves.

ITT ENGINEERED FOR LIFE
www.enidine.eu Email: info@enidine.eu Tel.: +49 6063 9314 0 Fax: +49 6063 9314 44

Jam Nut (JN)

*Note: One Hex Jam Nut included with every shock absorber.

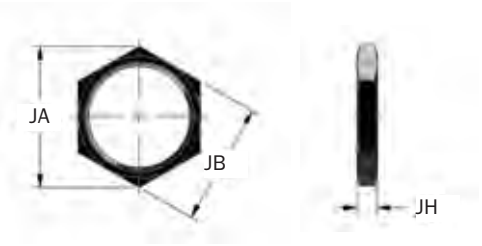

Catalog No./ Model	ECO Series Part Number	Model (Ref)	JA mm	JB mm	JH mm	Mass g
JN M8 x 0,75	J223839185	ECO 8 MF (B)	14,0	12,0	4,0	2
JN M8 x 1	J223839035	ECO 8 MC (B)	14,0	12,0	4,0	2
JN M10 x 1	J223840167	ECO 10 MF (B)	17,3	15,0	4,0	2
JN M12 x 1	J223841035	ECO 15 M (B)	15,0	13,0	3,2	2
JN M14 x 1	J223842035	ECO S/ECO 25 MF (B)	19,7	17,0	4,0	3
JN M14 x 1,5	J223842165	ECO S/ECO 25 MC (B)	19,7	17,0	4,0	3
JN M20 x 1,5	J223844035	ECO S/ECO 50 MC (B)	27,7	24,0	4,6	9
JN M25 x 1,5	J223846035	ECO 100 MF (B)	37,0	32,0	4,6	15

Stop Collar (SC)

ECO8 → ECO100

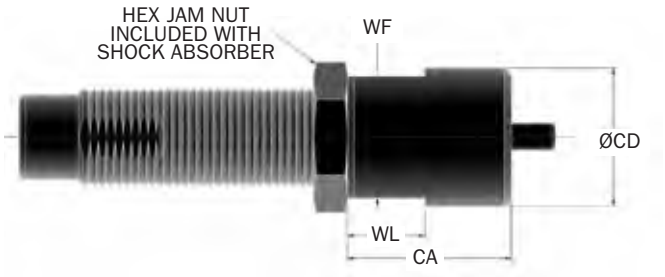

Catalog No./ Model	ECO Series Part Number	Model (Ref)	CA mm	CB mm	CD mm	WF mm	WL mm	Mass g
SC M8 x 0,75	M923839175	ECO 8 MF (B)	19,0	12,0	14,0	–	–	23
SC M8 x 1	M923839058	ECO 8 MC (B)	19,0	12,0	14,0	–	–	23
SC M10 x 1	M923840171	ECO 10 MF (B)	19,0	–	14,3	–	–	11
SC M12 x 1	M923841058	ECO 15 M (B)	19,0	–	16,0	14,0	9,0	14
SC M14 x 1,5	M923842171	ECO S/ECO 25 MF (B)	25,4	–	21,0	19,0	12,0	38
SC M14 x 1	M923842058	ECO S/ECO 25 MF (B)	25,4	–	18,0	17,0	12,0	20
SC M20 x 1,5	M924057058	ECO S/ECO 50 M (B)	38,0	–	25,0	22,0	12,0	63
SC M25 x 1,5	M923846171	ECO 100 MF (B)	44,5	–	38,0	32,0	15,0	215

Non-Adjustable Series Hydraulic Shock Absorbers
ECO Series

ECO 8 → ECO 100 Series

Accessories

Side Load Adaptor (SLA)

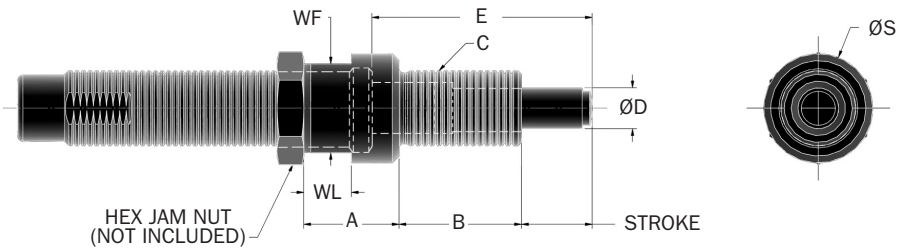

Catalog No./ Model	ECO Series Part Number	Model (Ref)	Stroke mm	A mm	B mm	C mm	D mm	E mm	S mm	WF mm	WL mm
SLA 10 MF	SLA 33457	ECO 10 MF	6,4	12	11	M10 x 1	5,0	21,9	13,0	11,0	4,0
SLA 12 MF	SLA 33299	ECO 15 MF	10,0	18	14	M12 x 1	6,0	32,4	14,0	13,0	7,0
SLA 14 MF	SLA 33297	ECO 25 MF	16,0	26	13	M14 x 1	8,0	45,2	18,0	15,0	7,0
SLA 14 MC	SLA 33298	ECO 25 MC	12,7	26	16	M14 x 1,5	8,0	45,2	18,0	15,0	7,0
SLA 14 MFS	SLA 33306	ECO S 25 MF	12,7	20	16	M14 x 1	8,0	39,2	18,0	15,0	7,0
SLA 14 MCS	SLA 33301	ECO S 25 MC	12,7	20	16	M14 x 1,5	8,0	39,2	18,0	15,0	7,0
SLA 20 MC	SLA 33302	ECO 50 M	22,0	32	17	M20 x 1,5	11,0	62,0	25,0	22,0	7,0
SLA 20 MCS	SLA 33262	ECO S 50 M	12,7	24	14	M20 x 1,5	11,0	41,5	25,0	22,0	7,0
SLA 25 MF	SLA 33263	ECO 100 MF	25,4	38	30	M25 x 1,5	15,0	73,2	36,0	32,0	7,0
SLA 25 MC	SLA 33296	ECO 100 MC	25,4	38	30	M27 x 3	15,0	73,2	36,0	32,0	10,0

Notes: 1. Maximum sideload angle is 30°.
2. Part numbers in page color are non-standard lead time items, contact ITT Enidine.

Universal Retaining Flange (UF)

UF M10 x 1 → UF M14 x 1,5

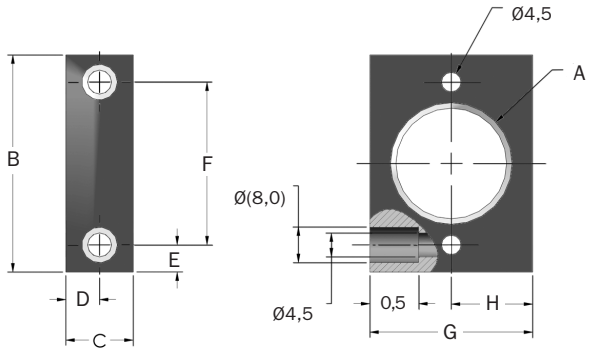

UF M20 x 1,5 → UF M27 x 3

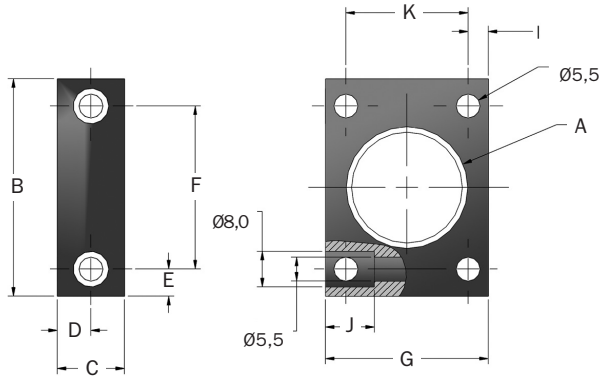

Catalog No./ Model	ECO Series Part Number	Model (Ref)	A mm	B mm	C mm	D mm	E mm	F mm	G mm	H mm	I mm	J mm	K mm
UF M10 x 1	U16363189	ECO 10M	M10 x 1	38,0	12,0	6,0	6,25	25,5	25,0	12,5	–	5,0	–
UF M12 x 1	U15588189	ECO 15 M (B)	M12 x 1	38,0	12,0	6,0	6,25	25,5	25,0	12,5	–	5,0	–
UF M14 x 1	U14950189	ECO/ECO S 25 MF (B)	M14 x 1,5	45,0	16,0	8,0	5,0	35,0	30,0	15,0	–	5,0	–
UF M14 x 1,5	U13935143	ECO/ECO S 25 MC (B)	M14 x 1,5	45,0	16,0	8,0	5,0	35,0	30,0	15,0	–	5,0	–
UF M20x 1,5	U12646143	ECO/ECO S 50 MC (B)	M20 x 1,5	48,0	16,0	8,0	6,5	35,0	35,0	–	4,75	10,0	25,5
UF M25 x 1,5	U13004143	ECO 100/110M	M25 x 1,5	48,0	16,0	8,0	6,5	35,0	35,0	–	4,75	10,0	25,5
UF M27 x 3	U12587143	ECO 100 MC	M27 X 3	48,0	16,0	8,0	6,5	35,0	35,0	–	4,75	10,0	25,5

Note: Part numbers in page color are non-standard lead time items, contact ITT Enidine.

Non-Adjustable Series Hydraulic Shock Absorbers
ECO Series

ECO 110 → ECO 225 Series

Technical Data

Standard

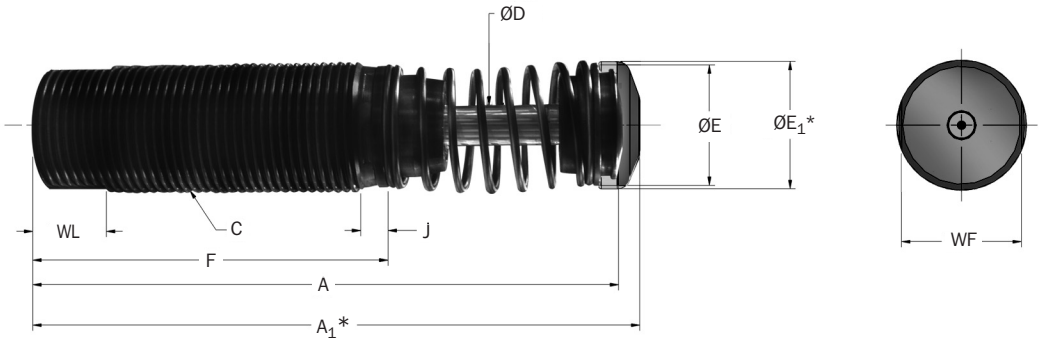

*Note: A1 and E1 apply to button models and urethane striker cap accessory.

Catalog No./ Model	(S) Stroke mm	(E_T) Max. Nm/cycle	(E_TE) Emergency Max. Nm/cycle	(E_TC) Max. Nm/h	(F_P) Max. Reaction N	Nominal Coil Spring Force		(F_D) Max. Propelling N	Mass g
						Extended N	Compressed N		
**PRO 110 MF (B)	40,0	190,0	–	75 700	7 500	18,0	49,0	2 200	454
**PRO 110 MC (B)	40,0	190,0	–	75 700	7 500	18,0	49,0	2 200	454
ECO 120 MF (B)	25,0	185,0	500	84 000	11 120	56,0	89,0	3 100	482
ECO 125 MF (B)	25,0	185,0	500	104 000	11 120	56,0	89,0	3 100	595
ECO 220 MF (B)	50,0	350,0	1 000	103 000	11 120	31,0	89,0	3 100	652
ECO 225 MF (B)	50,0	350,0	1 000	127 000	11 120	31,0	89,0	3 100	765

*Note: Maximum energy rating for emergency use only. Estimated cycle life of 1-5 cycles if used at maximum emergency rating.
**The PRO 110 Model is a Nickel Plated Shock Absorber.

Catalog No./ Model	Damping Constant	A mm	A_1 mm	C mm	D mm	E mm	E_1 mm	F mm	J mm	WF mm	WL mm
**PRO 110 MF (B)	-1,-2,-3	201,4	204,7	M25 x 1,5	8,0	22,2	22,2	127,0	1,5	–	–
**PRO 110 MC (B)	-1,-2,-3	201,4	204,7	M25 x 2,0	8,0	22,2	22,2	127,0	1,5	–	–
ECO 120MF (B)	-1,-2,-3	140,2	145,3	M33 x 1,5	9,5	29,0	30,5	87,0	5,3	30,0	16,0
ECO 125 MF (B)	-1,-2,-3	140,2	145,3	M36 x 1,5	9,5	29,0	30,5	87,0	5,3	33,0	16,0
ECO 220 MF (B)	-1,-2,-3	207,0	212,0	M33 x 1,5	9,5	29,0	30,5	128,0	5,3	30,0	16,0
ECO 225 MF (B)	-1,-2,-3	207,0	212,0	M36 x 1,5	9,5	29,0	30,5	128,0	5,3	33,0	16,0

Notes: 1. Dash numbers in page color are non-standard lead time items, contact ITT Enidine.
2. See page 55 for constant damping curves.

Non-Adjustable Series Hydraulic Shock Absorbers
ECO Series

ECO 120 → ECO 225 Series

Accessories

Clevis Mount

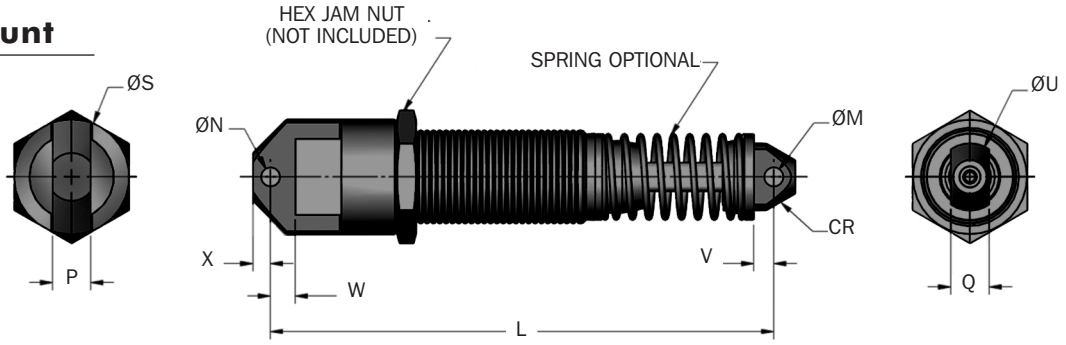

Catalog No./ Model	L mm	M +.005/-.000 mm	N +.005/-.000 mm	P +.000/-.010 mm	Q +.000/-.010 mm	S mm	U mm	V mm	W mm	X mm	CR mm	Mass Kg
ECO 120 CM (S)	167	6,38	6,38	12,70	12,70	38	23	6	12	6,1	11,2	0,59
ECO 220 CM (S)	234	6,38	6,38	12,70	12,70	38	23	6	12	6,1	11,2	0,77
ECO 125 CM (S)	180	6,38	6,38	12,70	12,70	38	22	6	24	6,0	11,2	0,73
ECO 225 CM (S)	230	6,38	6,38	12,70	12,70	38	22	6	24	6,0	11,2	0,86

Note: (S) indicates model comes with spring.

Flange Foot Mount

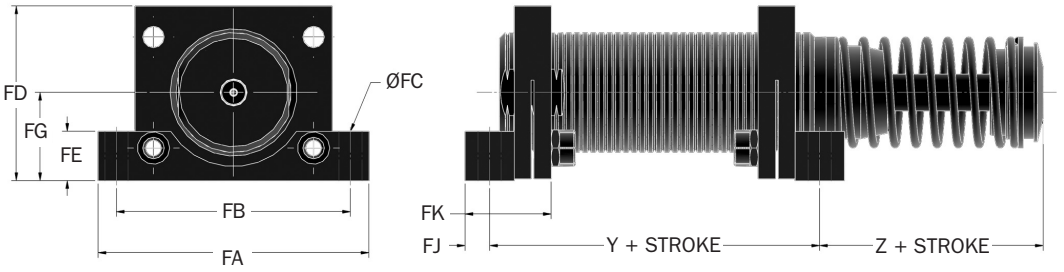

Catalog No./ Model	Part Number	Model (Ref)	Y mm	Z mm	FA mm	FB mm	FC mm	FD mm	FE mm	FG mm	FJ mm	FK mm	Bolt Size mm	Kit Mass g
FM M33 x 1,5	2F21049306	ECO 120/220M	57,2	31,8	70,0	60,3	5,90	45,0	12,7	22,7	6,4	22,2	M5	100
FM M36 x 1,5	2F21293306	ECO 125/225M	57,2	31,8	70,0	60,3	5,90	45,0	12,7	22,7	6,4	22,2	M5	100

Notes: 1. Shock absorber must be ordered separately from foot mount kit.
2. All foot mount kits include two foot mounts.

Stop Collar (SC)

Metric

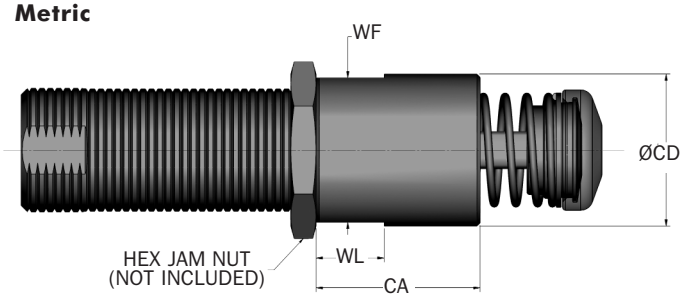

Catalog No./ Model	Part Number	Model (Ref)	CA mm	CD mm	WF mm	WL mm	Mass g
SC M33 x 1,5	M923865058	ECO 120/220 M	41,0	38,0	36,0	17,0	210
SC M36 x 1,5	M924063058	ECO 120/220 M	63,5	43,0	41,0	18,0	210

Jam Nut (JN)

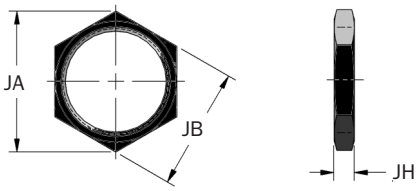

Catalog No./ Model	Part Number	Model (Ref)	JA mm	JB mm	JH mm	Mass g
JN M33 x 1,5	J224061035	ECO 120/220 M	47,3	41,0	6,4	27
JN M36 x 1,5	J224063035	ECO 125/225 M	47,3	41,0	6,4	27

Urethane Striker Cap (USC)

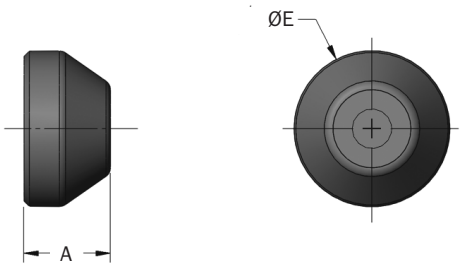

Catalog No./ Model	Part Number	Model (Ref)	A mm	E_1 mm	Mass g
UC 8609	C98609079	ECO 120, 125, 220 & 225	10,0	30,5	3

Rectangular Flange (RF)

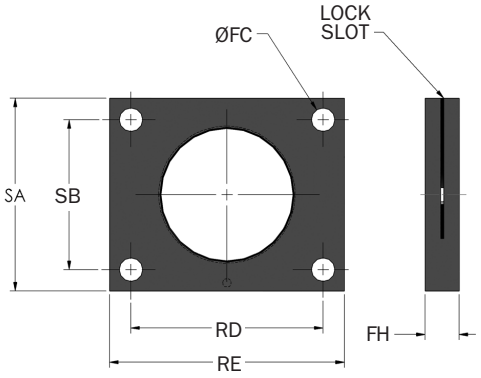

Catalog No./ Model	Part Number	Model (Ref)	FC mm	FH mm	RD mm	RE mm	SA mm	SB mm	Bolt Size mm	Mass g
RF M33 x 1,5	N121049141	ECO 120/ 220M	5,5	9,5	41,3	50,8	44,5	28,6	M5	30
RF M36 x 1,5	N121293129	ECO 125/225M	5,5	9,5	41,3	58,8	44,5	28,6	M5	30

Non-Adjustable Series Hydraulic Shock Absorbers
ECO Series

ECO 8 → ECO S50 Series

Sizing Curves

ECO 8

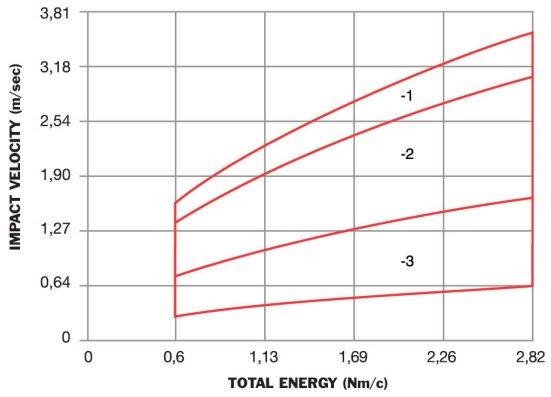

ECO 10

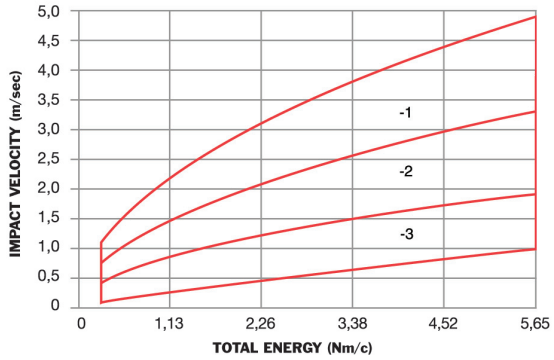

ECO 15

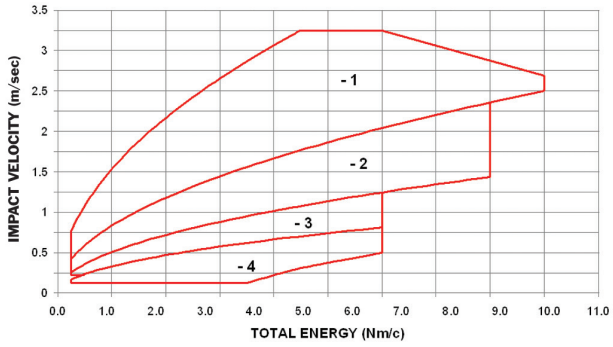

ECO 25

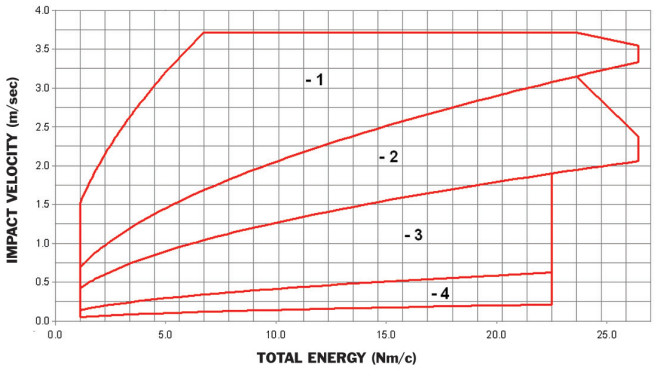

ECO S 25

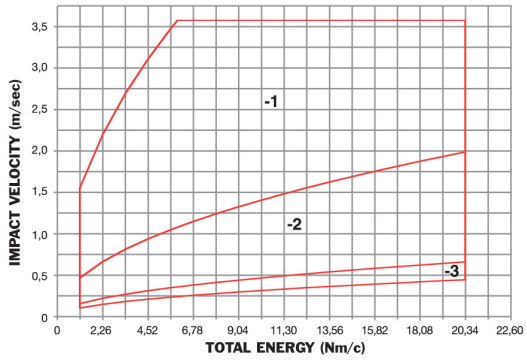

Note: Minimum impact velocity for ECO models is 0,1 m/sec

Non-Adjustable Series Hydraulic Shock Absorbers
ECO Series

ECO 50 → ECO 225 Series

Sizing Curves

ECO 50

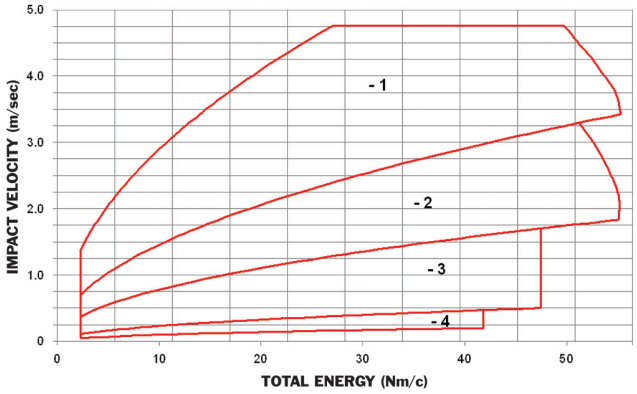

ECO S 50

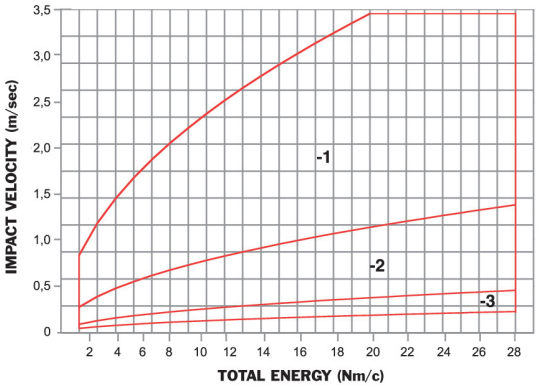

ECO 100

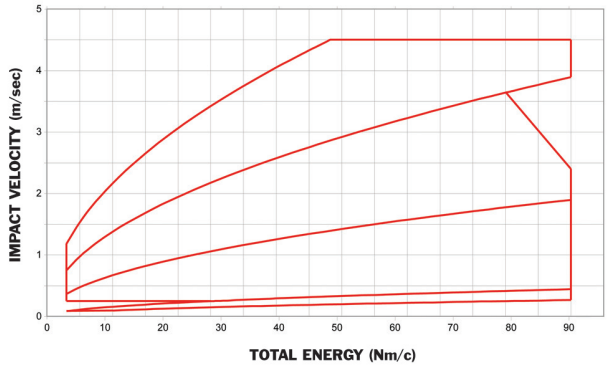

PRO 110

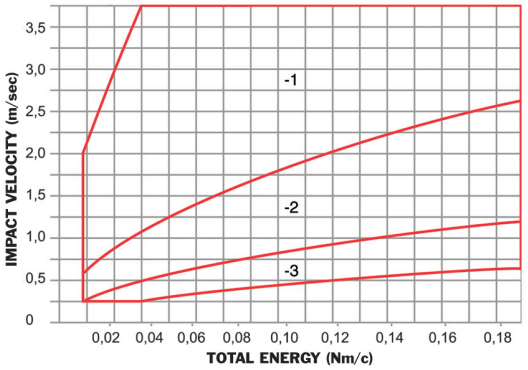

ECO 120/125

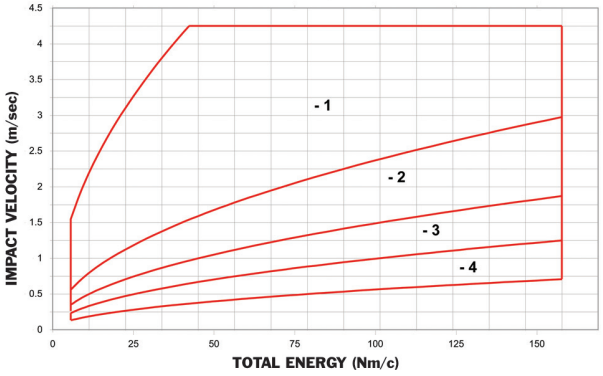

ECO 220/225

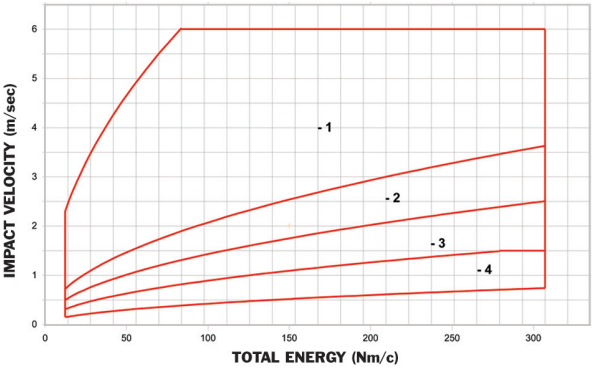

Note: Minimum impact velocity for ECO models is 0,1 m/sec

ITT ENGINEERED FOR LIFE
www.enidine.eu Email: info@enidine.eu Tel.: +49 6063 9314 0 Fax: +49 6063 9314 44

Typical Applications

Factory Automation

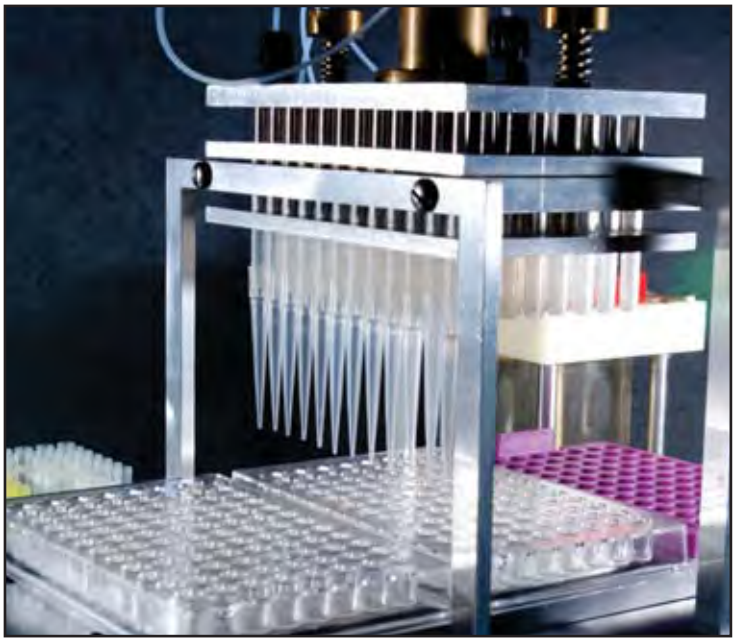

Medical Laboratory Equipment

Bottle Manufacturing

Non-Adjustable Series Hydraulic Shock Absorbers

PMXT Mid-Bore Series

Overview

PMXT 1525/2150
Mid-Bore Series

ITT Enidine non-adjustable hydraulic shock absorbers can accommodate varying energy conditions. This family of tamperproof shock absorbers provides consistent performance, cycle after cycle. Non-adjustable models are designed to absorb maximum energy within a compact envelope size.

The **PMXT Series** uses a self-compensating design to provide energy absorption in low velocity and high drive force applications. Models can accommodate a wide range of operating conditions with varying masses or propelling forces.

Features and Benefits

- Extensive non-adjustable product line offers flexibility in both size and energy absorption capacity to fulfill a wide range of application requirements.
- Tamperproof design ensures repeatable performance.
- Special materials and finishes can be designed to meet specific customer requirements.
- Incorporating optional fluids and seal packages can expand the standard operating temperature range from (–10°C to 80°C) to (–35°C to 100°C).
- Threaded cylinders provide mounting flexibility and increase surface area for improved heat dissipation.
- A select variety of surface finishes maintains original quality appearance and provides the longest corrosion resistance protection.
- ISO quality standards result in reliable, long-life operation.

ITT ENGINEERED FOR LIFE
www.enidine.eu Email: info@enidine.eu Tel.: +49 6063 9314 0 Fax: +49 6063 9314 44

ITT Enidine Non-Adjustable Multiple Orifice Shock Absorbers

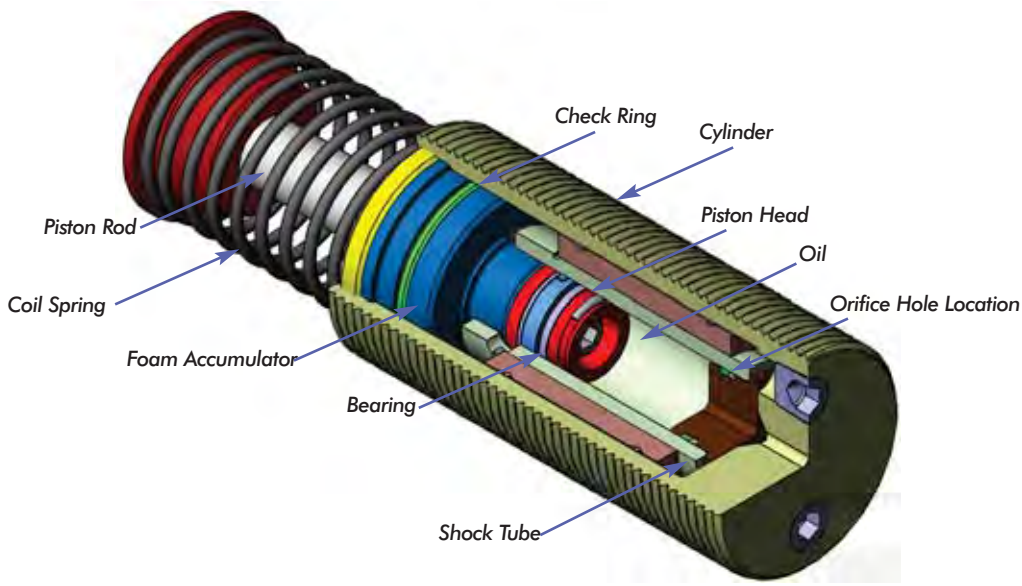

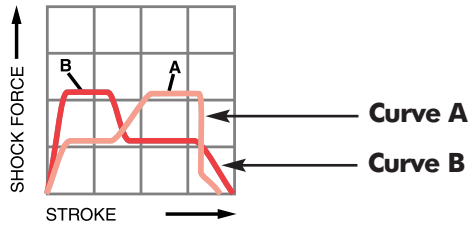

Self-compensating damping maintains acceptable deceleration with conventional type damping characteristics. Self-compensating shock absorbers operate over a wide range of weights and velocities. These shock absorbers are well suited for high drive force, low velocity applications, and where energy conditions may change. **Curve A** shows the *shock force vs. stroke* curve of a self-compensating shock absorber impacted with a low velocity and high drive force. **Curve B** shows the *shock force vs. stroke* curve of a self-compensating shock absorber impacted with a high velocity and low drive force.

The design of a multi-orifice shock absorber features a double cylinder arrangement with space between the concentric shock tube and cylinder, and a series of orifice holes drilled down the length of the shock tube wall.

During piston movement, the check ring is seated and oil is forced through the orifices in the shock tube wall, into the closed cellular foam accumulator and behind the piston head.

As the piston head moves it closes off orifice holes, thus reducing the available orifice area in proportion to the velocity. After the load is removed the coil spring pushes the piston rod outward. This unseats the check ring and permits the oil to flow from the accumulator and across the piston head, back into the shock tube. This allows quick repositioning for the next impact.

Low Pressure multiple orifice shock absorbers can provide progressive or self-compensating damping, depending on the impact conditions.

Non-Adjustable Series Hydraulic Shock Absorbers

PMXT Mid-Bore Series

PMXT 1525 → PMXT 2150 Series

Technical Data

Standard

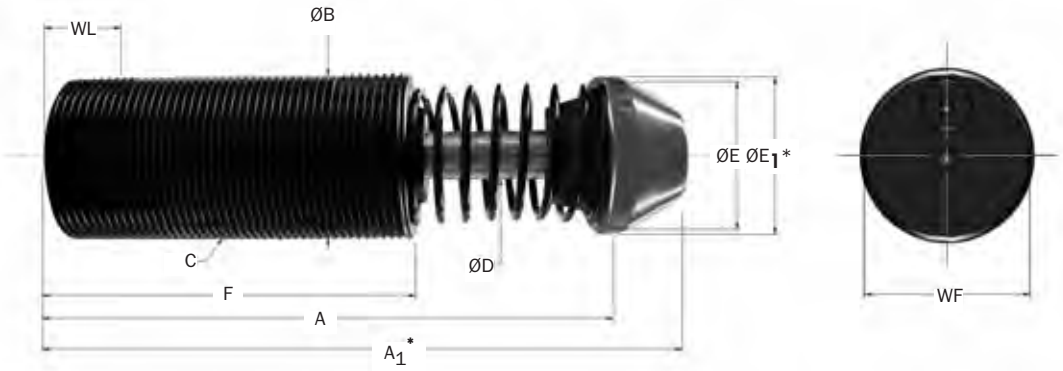

*Note: A_1 and E_1 apply to urethane striker cap accessory.

Catalog No./ Model	(S) Stroke mm	(E_T) Max. Nm/cycle	(E_TC) Max. Nm/h	(F_P) Max. Reaction N	Nominal Coil Spring Force		(F_D) Max. Propelling N	Mass Kg
					Extended N	Compressed N		
PMXT 1525	25,0	367,0	126 000	29 000	48,0	68,0	6 700	1,0
PMXT 1550	50,0	735,0	167 000	29 000	29,0	78,0	6 700	1,1
PMXT 1575	75,0	1 130,0	201 000	29 000	31,0	78,0	6 700	1,3
PMXT 2050	50,0	1 865,0	271 000	60 500	80,0	155,0	17 800	2,7
PMXT 2100	100,0	3 729,0	362 000	60 500	69,0	160,0	17 800	3,3
PMXT 2150	150,0	5 650,0	421 000	60 500	87,0	285,0	17 800	4,2

Catalog No./ Model	Damping Constant	A mm	A_1 mm	C mm	D mm	E mm	E_1 mm	F mm	WF mm	WL mm
PMXT 1525 IF	-1,-2,-3	5.68	6.37	(IF) 1 3/4-12 UN	.50	1.48	1.75	3.63	1.70	0.75
PMXT 1525 MF	-1,-2,-3	(144,0)	(162,0)	(MF) M45 x 1,5	(12,7)	(38,0)	(44,5)	(92,0)	(43,5)	(19,0)
PMXT 1550 IF	-1,-2,-3	7.68	8.37	(IF) 1 3/4-12 UN	.50	1.48	1.75	4.63	1.70	0.75
PMXT 1550 MF	-1,-2,-3	(195,0)	(213,0)	(MF) M45 x 1,5	(12,7)	(38,0)	(44,5)	(118,0)	(43,5)	(19,0)
PMXT 1575 IF	-1,-2,-3	9.68	10.37	(IF) 1 3/4-12 UN	.50	1.48	1.75	5.63	1.70	0.75
PMXT 1575 MF	-1,-2,-3	(246,0)	(264,0)	(MF) M45 x 1,5	(12,7)	(38,0)	(44,5)	(143,0)	(43,5)	(19,0)
PMXT 2050 IF	-1,-2,-3	8.90	9.55	(IF) 2 1/2-12 UN	.75	1.98	2.25	5.50	2.42	0.75
PMXT 2050 MF	-1,-2,-3	(226,0)	(243,0)	(MF) M64 x 2,0	(19,0)	(50,0)	(57,0)	(140,0)	(61,5)	(19,0)
PMXT 2100 IF	-1,-2,-3	12.90	13.55	(IF) 2 1/2-12 UN	.75	1.98	2.25	7.50	2.42	0.75
PMXT 2100 MF	-1,-2,-3	(328,0)	(345,0)	(MF) M64 x 2,0	(19,0)	(50,0)	(57,0)	(191,0)	(61,5)	(19,0)
PMXT 2150 IF	-1,-2,-3	17.97	18.62	(IF) 2 1/2-12 UN	.75	2.38	2.38	9.50	2.42	0.75
PMXT 2150 MF	-1,-2,-3	(956,0)	(473,0)	(MF) M64 x 2,0	(19,0)	(60,0)	(60,0)	(241,0)	(61,5)	(19,0)

Notes: 1. Dash numbers in page color are non-standard lead time items, contact ITT Enidine.
2. See page 59 for constant damping curves.
3. Urethane striker caps are available as accessories for models PM 1525 to PM 2150.

ITT ENGINEERED FOR LIFE
www.enidine.eu Email: info@enidine.eu Tel.: +49 6063 9314 0 Fax: +49 6063 9314 44

Non-Adjustable Series Hydraulic Shock Absorbers
PMXT Mid-Bore Series

PMXT 1525 CM → PMXT 2150 CM Series

Accessories

Clevis Mount

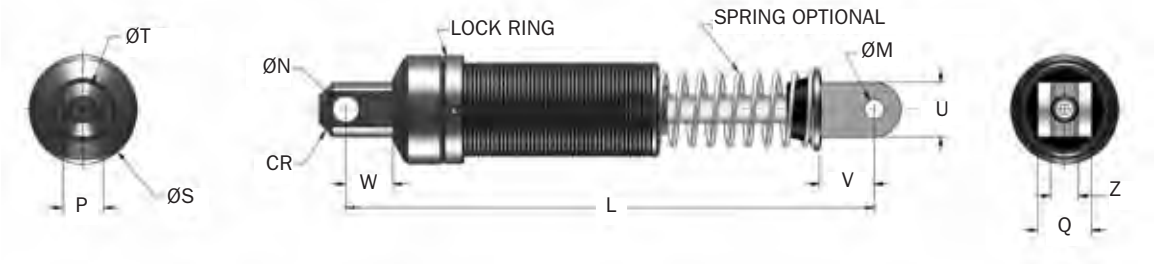

Catalog No./ Model	L mm	M +.005/-.000 (+0,13/-0,00) mm	N +.005/-.000 (+0,13/-0,00) mm	P +.000/-.010 (+0,00/-0,25) mm	Q +.000/-.010 (+0,00/-0,25) mm	S mm	T mm	U mm	V mm	W mm	Z +.020/-.000 (+0,51/-0,00) mm	CR mm	Mass Kg
∆PMXT 1525 CM (S)	199	9,60	12,7	19,00	25,4	51	25	25	26	22	12,9	14,3	1,36
∆PMXT 1550 CM (S)	250	9,60	12,70	19,00	25,4	51	25	25	26	22	12,9	14,3	1,45
∆PMXT 1575 CM (S)	300	9,60	12,70	19,00	25,4	51	25	25	26	22	12,9	14,3	1,63
∆PMXT 2050 CM (S)	306	19,07	19,07	31,70	38,0	73	38	38	35	26	16,0	23,0	3,72
∆PMXT 2100 CM (S)	408	19,07	19,07	31,70	38,0	73	38	38	35	26	16,0	23,0	4,22
∆PMXT 2150 CM (S)	537	19,07	19,07	31,70	38,0	73	38	38	35	26	16,0	23,0	5,08

Notes: 1. ∆ = Non-standard lead time items, contact ITT Enidine.
2. (S) indicates model comes with spring.

Flange Foot Mount

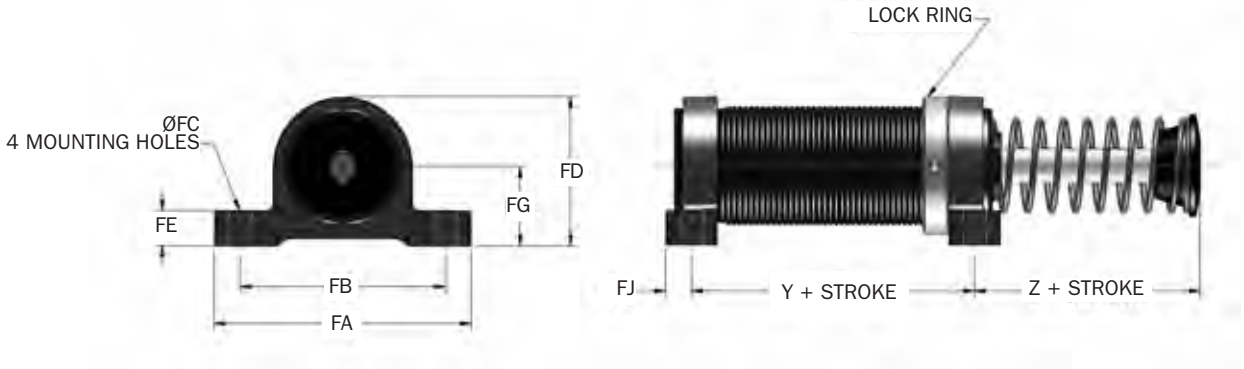

Catalog No./ Model	Part Number	Model (Ref)	Y mm	Z mm	FA mm	FB mm	FC mm	FD mm	FE mm	FG mm	FJ mm	Size mm	Bolt Mass g	Kit Notes
FM M45 x 1,5	2F8637	PMXT 1500M Series	60,5	26,9	95,3	76,2	8,60	55,0	12,7	29,5	9,7	M8	370	3
FM M64 x 2	2F3010	PMXT 2000M Series	76,2	39,6	143,0	124,0	10,40	85,6	16,0	44,5	11,2	M10	1 050	1,3

Notes: 1. PM 2150 Z dimension is 2.69 in.
2. Shock absorber must be ordered separately from foot mount kit.
3. All foot mount kits include two foot mounts and lock ring.

Stop Collar (SC)

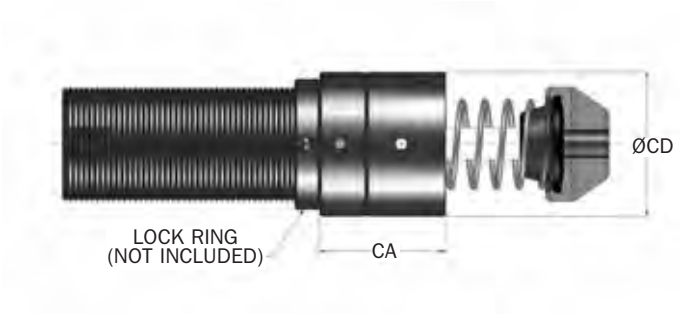

Catalog No./ Model	Part Number	Model Ref	CA mm	CD mm	Mass g
SC M45 x 1.5	8K8637	PMXT 1500M Series	49,0	56,5	340
Δ SC M64 x 2 x 2	M93010057	PMXT 2050M Series	89,0	76,0	936
Δ SC M64 x 2 x 4	M93011057	PMXT 2100M Series	114,0	76,0	1 191
Δ SC M64 x 2 x 6	M93012057	PMXT 2150M Series	143,0	76,0	1 475

Note: Δ = Non-standard lead time items, contact ITT Enidine.

Urethane Striker Cap (USC)

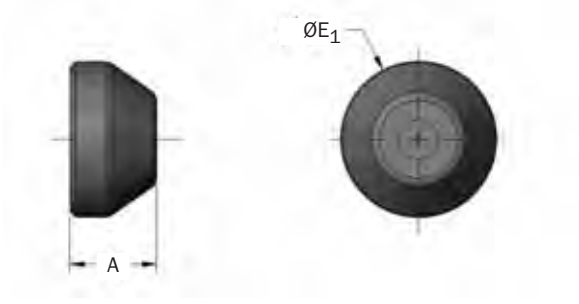

Catalog No./ Model	Part Number	Model Ref	A mm	E_1 mm	Mass g
UC 2940	C92940079	PMXT 1500M	24,5	44,5	14
UC 3010	C93010079	PMXT 2000M	24,0	57,0	23

Lock Ring (LR)

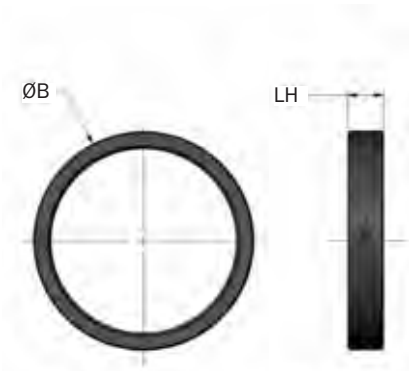

Catalog No./ Model	Part Number	Model Ref	B mm	LH mm	Mass g
LR M45 x 1.5	F88637049	PMXT 1500M Series	57,2	9,5	75
LR M64 x 2	F83010049	PMXT 2000M Series	72,9	12,7	85

Square Flange (SF)

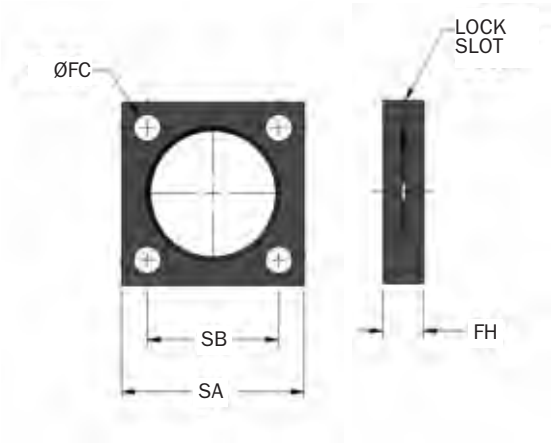

Catalog No./ Model	Part Number	Model Ref	FC mm	FH mm	SA mm	SB mm	Bolt Size mm	Mass g
SF M45 x 1.5	M48637129	PMXT 1500M Series	8,6	12,7	57,2	41,3	M8	140
SF M64 x 2	M43010141	PMXT 2000M Series	10,4	15,7	89	69,9	M10	570

Rectangular Flange (RF)

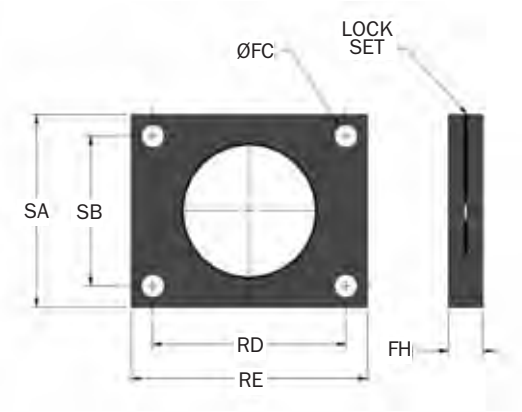

Catalog No./ Model	Part Number	Model Ref	FC mm	FH mm	RD mm	RE mm	SA mm	SB mm	Bolt Size mm	Mass g
RF M45 x 1.5	M58637129	PMXT 1500M Series	8,6	12,7	60,5	76,2	57,2	41,4	M8	260

Non-Adjustable Series Hydraulic Shock Absorbers

PMXT Mid-Bore Series

PM 120/125 → PMXT 2150 Series

Sizing Curves

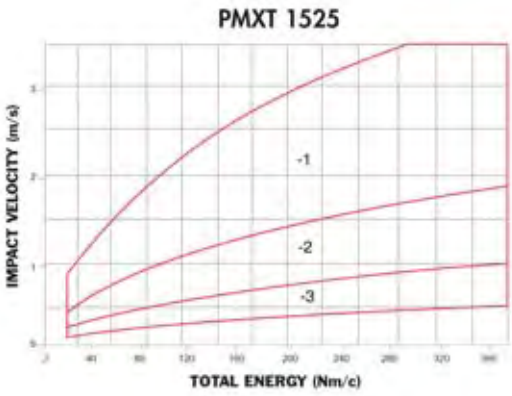

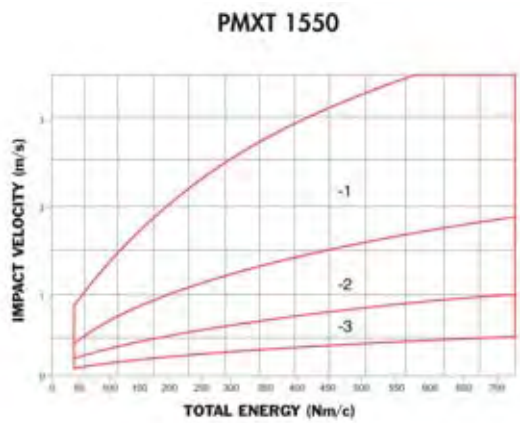

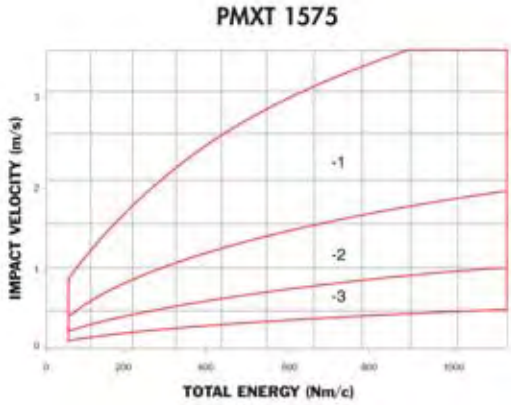

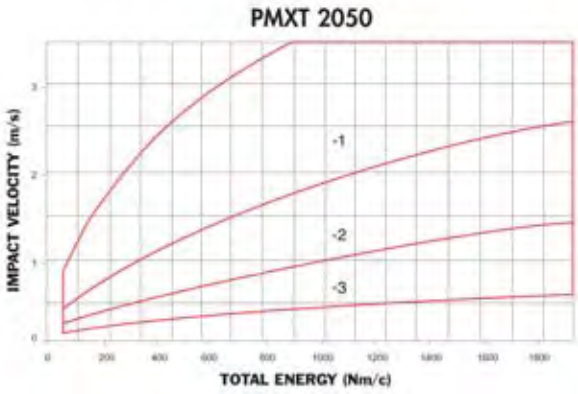

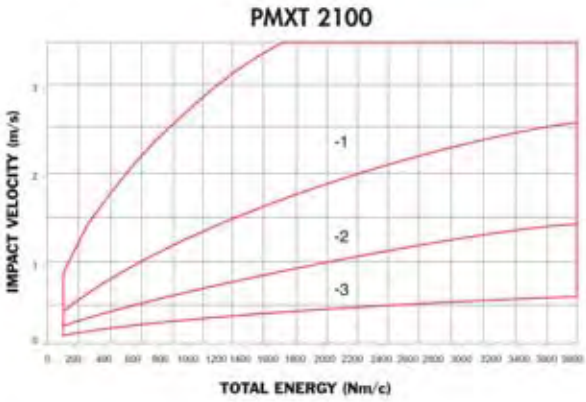

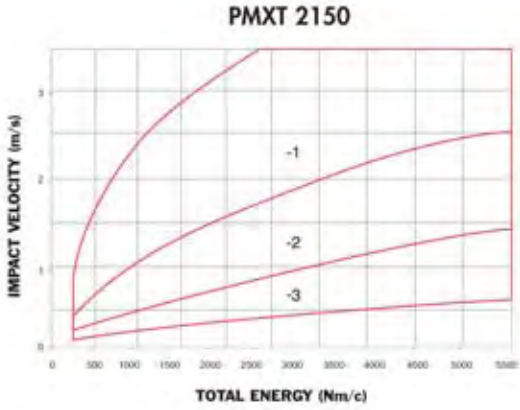

Note: Minimum impact velocity for PM models is 0,1 m/sec

ITT ENGINEERED FOR LIFE
www.enidine.eu Email: info@enidine.eu Tel.: +49 6063 9314 0 Fax: +49 6063 9314 44

Typical Applications

Automated Handling

Conveyor Systems

Robotics

Heavy Duty Shock Absorbers
HDN, HDA Series

Overview

ITT Enidine Heavy Duty Series large-bore hydraulic shock absorbers protect equipment from large impacts in applications such as automated storage and retrieval systems, as well as overhead bridge and trolley cranes. They are available in a wide variety of stroke lengths and damping characteristics to increase equipment life and meet stringent deceleration requirements.

HDN Series
Custom-orificed design accommodates specified damping requirements. Computer generated output performance simulation is used to optimize the orifice configuration. Available in standard bore dimensions of up to 100mm and strokes over 1 524mm.

HDA Series
Adjustable units enable the user to modify shock absorber resistance to accommodate load velocity variations, with strokes up to 305mm. Standard adjustable configurations available.

HDN Series

Features and Benefits HDN, HDA

- Designed with environmentally friendly materials and fluids.
- Compact design smoothly and safely decelerates large energy capacity loads up to 330 000 Nm.
- Internal charged air/oil accumulator replaces mechanical return springs, providing shorter overall length and reduced weight. **Optional** Bladder Accumulator (BA) for higher cycle rates also available.
- Engineered to meet OSHA, AISE, CMAA and other safety specifications such as DIN and FEM.
- Wide variety of optional configurations including bellows, clevis mounts and safety cables.
- Painted external components provide excellent corrosion protection.
- Epoxy painting and special rod materials are available for use in highly corrosive environments.
- All sizes are fully field repairable.
- Piston rod extension sensor systems available for re-use safety requirements.
- Incorporating optional fluids and seal packages can expand standard operating temperature range from –10°C to 60°C to –40°C to 100°C.

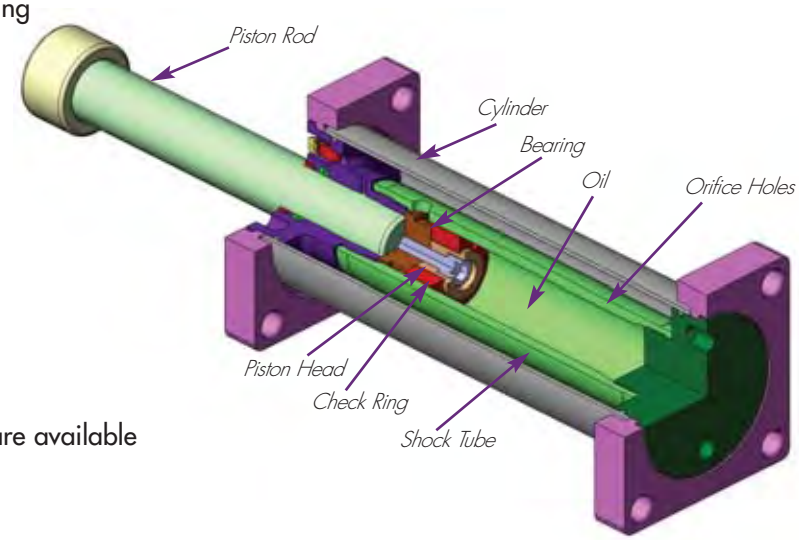

ITT
ENGINEERED FOR LIFE
www.enidine.eu Email: info@enidine.eu Tel.: +49 6063 9314 0 Fax: +49 6063 9314 44

Heavy Duty Shock Absorbers
HDN 1.5 Series

HDN 1.5 x 2 → HDN 1.5 x 32 Series

Technical Data

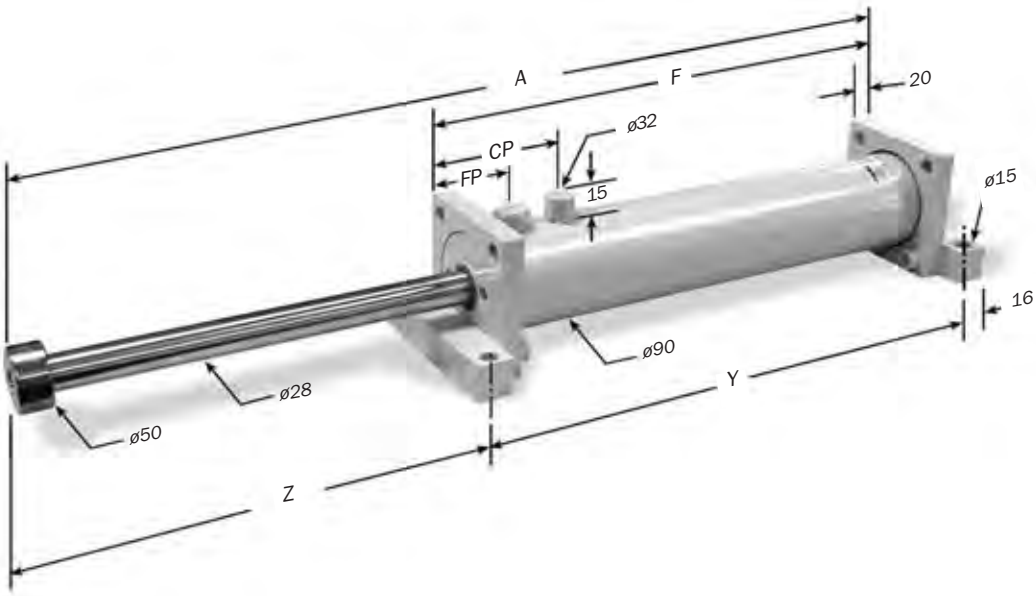

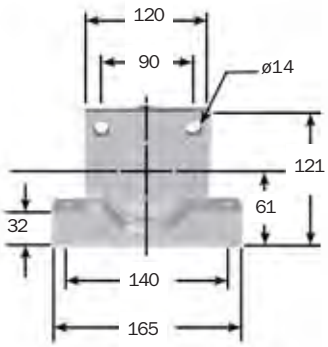

** HDN w/o BA option contains only a single charge/fill port.
* Denotes Shock Absorber Bladder Accumulator Option.
Note: For TF, FF and FR mounting, delete front foot and dimensions.

Dimensions are in millimeters.

Catalog No./ Model	(S) Stroke mm	(E_T) Max. Nm/cycle	(E_TC) Max. Nm/hr	(F_P) Max. Shock Force N	Nominal Return Force BA* N	Nominal Return Force w/o BA* N	A mm	F mm	Y mm	Z mm	With BA CP BA* mm	With BA FP BA* mm	CP** w/o BA* mm	Mass Kg
HDN 1.5 x 2	50	3 200	189 000	70 060	220	320	310	208	240	86	139	86	41	10
HDN 1.5 x 4	100	6 100	368 000	70 060	220	410	410	258	290	136	139	86	41	12
HDN 1.5 x 6	150	9 100	546 700	70 060	220	450	510	308	340	186	139	86	41	12
HDN 1.5 x 8	200	12 200	732 500	70 060	220	525	613	360	392	237	139	86	41	13
HDN 1.5 x 10	250	15 200	781 000	70 060	220	600	715	411	443	288	139	86	41	14
HDN 1.5 x 12	300	18 300	877 900	70 060	220	920	817	462	494	339	139	86	41	16
HDN 1.5 x 14	350	20 900	972 900	70 060	220	1 120	918	512	544	390	139	86	41	17
HDN 1.5 x 16	400	23 300	1 069 800	60 060	220	1 120	1 019	563	595	440	139	86	41	18
HDN 1.5 x 18	450	25 300	1 166 700	47 820	220	1 120	1 121	614	646	491	139	86	41	19
HDN 1.5 x 20	500	27 200	1 263 600	38 920	220	1 120	1 223	665	697	542	139	86	41	20
HDN 1.5 x 24	600	30 500	1 457 400	27 800	220	1 120	1 427	767	799	644	139	86	41	23
HDN 1.5 x 28	713	33 600	1 649 300	21 130	220	1 120	1 629	868	900	745	139	86	41	20
HDN 1.5 x 32	813	36 500	1 839 300	16 460	220	1 120	1 830	968	1 000	846	139	86	41	23

Notes: 1. HDN shock absorbers will function satisfactorily at 5% of their maximum rated energy per cycle. If less than these values, a smaller model should be specified.
2. It is recommended that the customer consult ITT Enidine for safety-related overhead crane applications.
3. The energy data listed is for ideal linear impacts only. If side load conditions exist in the application, contact ITT Enidine for sizing assistance.
4. Rear flange mounting of 300 mm strokes and longer not recommended. Front and rear flange or foot mount configurations are recommended.
5. Maximum cycle rate is 60 cycles/hr. for HDN with BA (Bladder Accumulator) option and 30 cycles/hr. without BA option.
6. For impact velocities over 4.5 m/s, consult factory.

Heavy Duty Series Shock Absorber
HDN 2.0 Series

HDN 2.0 x 6 → HDN 2.0 x 56 Series

Technical Data

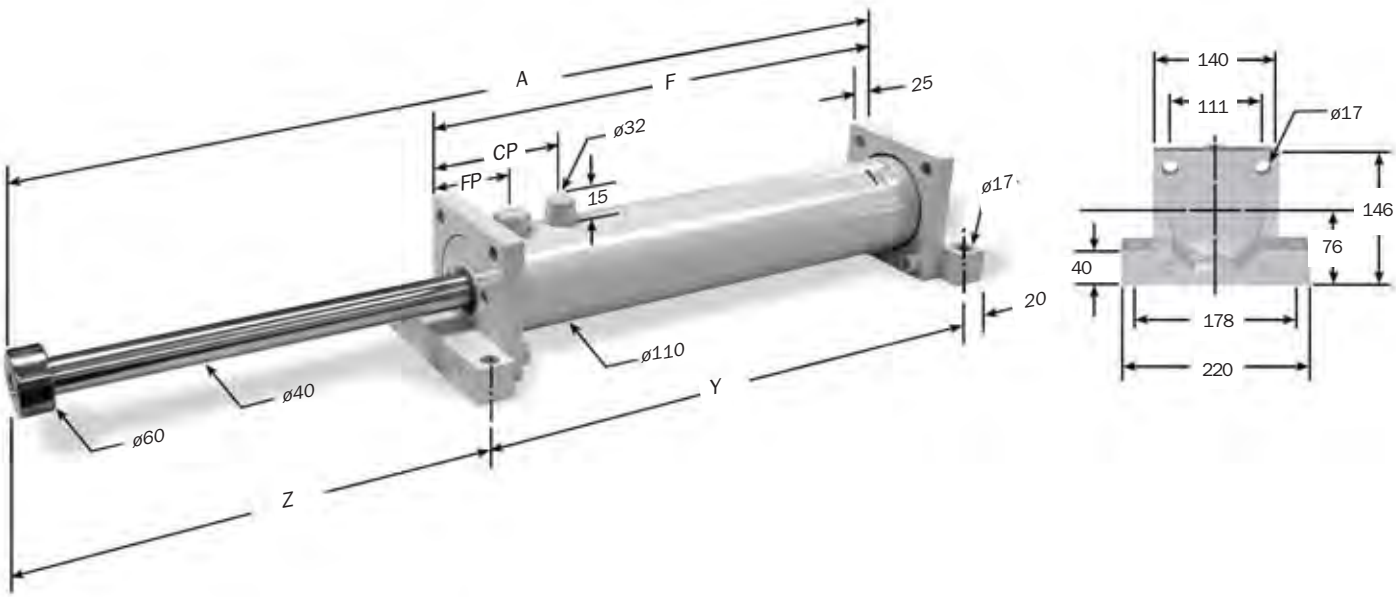

** HDN w/o BA option contains only a single charge/fill port.
* Denotes Shock Absorber Bladder Accumulator Option.

Dimensions are in millimeters.

Note: For TF, FF and FR mounting, delete front foot and dimensions.

Catalog No./ Model	(S) Stroke mm	(E_T) Max. Nm/cycle	(E_TC) Max. Nm/hr	(F_P) Max. Shock Force N	Nominal Return Force BA* N	Nominal Return Force w/o BA* N	A mm	F mm	Y mm	Z mm	With BA CP BA* mm	With BA FP BA* mm	CP** w/o BA* mm	Mass Kg
HDN 2.0 x 6	152	14 400	862 100	111 200	535	870	553	339	379	194	176	96	46	23
HDN 2.0 x 8	203	19 200	913 700	111 200	535	1 040	655	390	430	245	176	96	46	25
HDN 2.0 x 10	250	24 000	1 033 200	111 200	535	1 340	757	441	481	296	176	96	46	23
HDN 2.0 x 12	300	28 600	1 152 700	111 200	535	2 290	859	492	532	347	176	96	46	25
HDN 2.0 x 14	350	32 300	1 272 100	111 200	535	2 290	960	543	583	397	176	96	46	27
HDN 2.0 x 16	400	36 000	1 391 600	111 200	535	2 290	1 062	594	634	448	176	96	46	29
HDN 2.0 x 18	450	39 700	1 511 100	111 200	535	2 290	1 164	645	685	499	176	96	46	31
HDN 2.0 x 20	500	43 300	1 628 300	111 200	535	2 290	1 265	695	735	550	176	96	46	33
HDN 2.0 x 24	600	50 700	1 867 200	111 200	535	2 290	1 469	797	837	652	176	96	46	36
HDN 2.0 x 28	700	58 200	2 106 200	111 200	535	2 290	1 672	899	939	753	176	96	46	42
HDN 2.0 x 32	800	70 700	2 527 900	111 200	535	2 290	1 953	1 079	1 119	854	256	176	46	49
HDN 2.0 x 36	900	77 900	2 762 200	100 000	535	2 290	2 151	1 179	1 219	952	256	176	46	53
HDN 2.0 x 40	1 000	84 400	2 996 500	84 500	535	2 290	2 351	1 279	1 319	1 052	256	176	46	56
HDN 2.0 x 48	1 200	95 400	3 465 000	60 000	535	2 290	2 751	1 479	1 519	1 252	256	176	46	64
HDN 2.0 x 56	1 400	104 200	3 957 000	35 100	535	2 290	3 171	1 689	1 729	1 462	975	176	46	73

Notes: 1. HDN shock absorbers will function satisfactorily at 5% of their maximum rated energy per cycle. If less than these values, a smaller model should be specified.
2. It is recommended that the customer consult ITT Enidine for safety-related overhead crane applications.
3. The energy data listed is for ideal linear impacts only. If side load conditions exist in the application, contact ITT Enidine for sizing assistance.
4. Rear flange mounting of 300 mm strokes and longer not recommended. Front and rear flange or foot mount configurations are recommended.
5. Maximum cycle rate is 60 cycles/hr. for HDN with BA (Bladder Accumulator) option and 30 cycles/hr. without BA option.
6. For impact velocities over 4.5 m/s, consult factory.
7. ** HDN 2.0 x 56 has two charge ports.

ITT ENGINEERED FOR LIFE
www.enidine.eu Email: info@enidine.eu Tel.: +49 6063 9314 0 Fax: +49 6063 9314 44

Heavy Duty Series Shock Absorber
HDN 3.0 Series

HDN 3.0 x 2 → HDN 3.0 x 60 Series

Technical Data

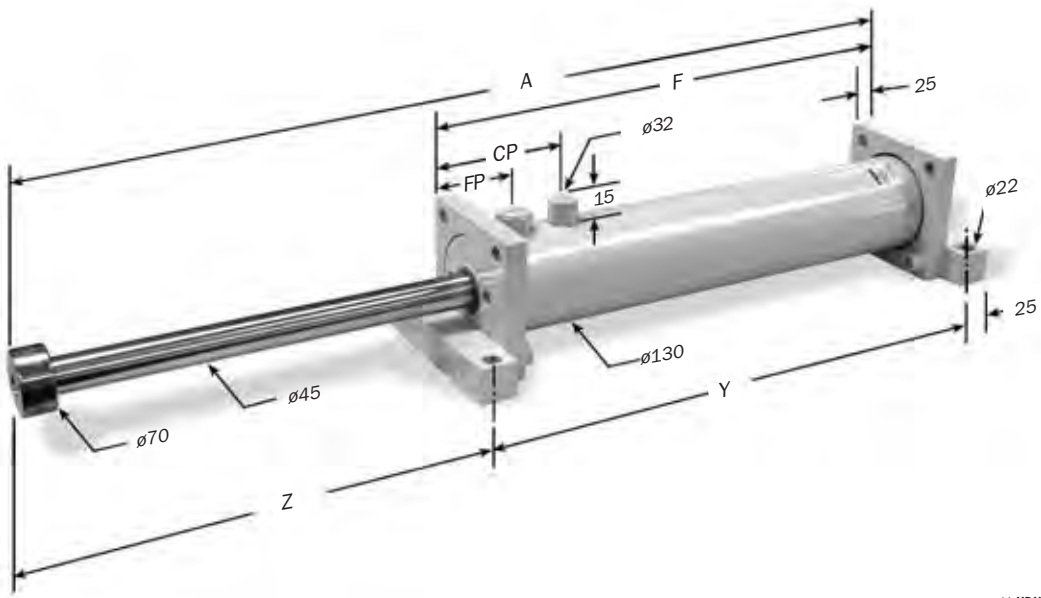

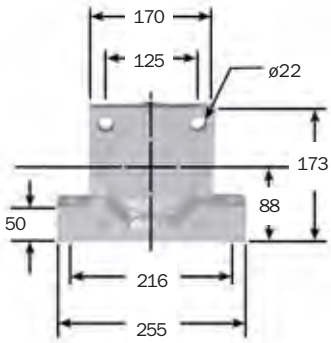

** HDN w/o BA option contains only a single charge/fill port.
* Denotes Shock Absorber Bladder Accumulator Option.
Note: For TF, FF and FR mounting, delete front foot and dimensions.

Dimensions are in millimeters.

Catalog No./ Model	(S) Stroke mm	(E_T) Max. Nm/cycle	(E_TC) Max. Nm/hr	(F_P) Max. Inital Shock Force N	Nominal Return Force BA* N	Nominal Return Force w/o BA* N	A (mm)	F (mm)	Y (mm)	Z (mm)	CP BA* mm	FP BA* mm	CP** w/o BA* mm	Mass Kg
HDN 3.0 x 2	50	9 600	578 500	222 400	670	1 130	336	203	253	108	128	61	46	21
HDN 3.0 x 3	75	14 600	659 000	222 400	710	1 810	387	229	279	133	128	61	46	22
HDN 3.0 x 5	125	24 200	805 700	222 400	735	2 895	489	280	330	184	128	61	46	25
HDN 3.0 x 8	200	35 700	1 021 500	222 400	755	2 895	640	355	405	260	128	61	46	29
HDN 3.0 x 10	250	43 200	1 168 300	222 400	780	2 895	742	406	456	311	128	61	46	32
HDN 3.0 x 12	300	50 700	1 315 000	222 400	780	2 895	844	457	507	362	128	61	46	35
HDN 3.0 x 14	350	62 900	1 605 700	222 400	800	2 895	995	558	608	412	178	111	46	43
HDN 3.0 x 16	400	70 400	1 752 400	222 400	800	2 895	1 097	609	659	463	178	111	46	45
HDN 3.0 x 18	450	77 900	1 899 200	222 400	800	2 895	1 199	660	710	514	178	111	46	48
HDN 3.0 x 20	500	85 400	2 046 000	222 400	800	2 895	1 301	711	761	565	178	111	46	51
HDN 3.0 x 24	600	100 300	2 336 600	222 400	800	2 895	1 504	812	862	667	178	111	46	57
HDN 3.0 x 28	700	115 300	2 630 100	222 400	800	2 895	1 707	914	964	768	178	111	46	62
HDN 3.0 x 32	800	130 200	2 920 700	180 200	800	2 895	1 910	1 015	1 065	870	178	161	46	68
HDN 3.0 x 36	900	147 700	3 349 500	160 100	800	2 895	2 156	1 164	1 214	967	228	161	46	77
HDN 3.0 x 40	1 000	159 600	3 637 200	140 000	800	2 895	2 356	1 264	1 314	1 067	228	161	46	85
HDN 3.0 x 48	1 200	179 700	4 212 800	95 600	825	2 895	2 756	1 464	1 514	1 267	228	161	46	94
HDN 3.0 x 56	1 400	196 700	4 788 300	55 600	825	2 895	3 156	1 664	1 714	1 467	947	161	46	103
HDN 3.0 x 60	1 500	206 800	5 116 300	53 200	825	2 895	3 384	1 778	1 828	1 580	1 004	161	46	106
HDN 3.0 x 64	1 629	217 100	5 210 400	53 200	825	2 895	3 688	1 980	2 030	1 683	439/1 527	260	46	110
HDN 3.0 x 72	1 830	238 000	6 242 000	53 200	825	2 895	4 089	2 180	2 230	1 884	439/1 727	260	46	118

Notes: 1. HDN shock absorbers will function satisfactorily at 5% of their maximum rated energy per cycle. If less than these values, a smaller model should be specified.
2. It is recommended that the customer consult ITT Enidine for safety-related overhead crane applications.
3. The energy data listed is for ideal linear impacts only. If side load conditions exist in the application, contact ITT Enidine for sizing assistance.
4. Rear flange mounting of 300 mm strokes and longer not recommended. Front and rear flange or foot mount configurations are recommended.
5. Maximum cycle rate is 60 cycles/hr. for HDN with BA (Bladder Accumulator) option and 30 cycles/hr. without BA option.
6. For impact velocities over 4.5 m/s, consult factory.
7. ** HDN 3.0 x 56 and HDN 3.0 x 60 have 2 charge ports.

Heavy Duty Series Shock Absorber

HDN 3.5 Series

HDN 3.5 x 2 → HDN 3.5 x 56 Series

Technical Data

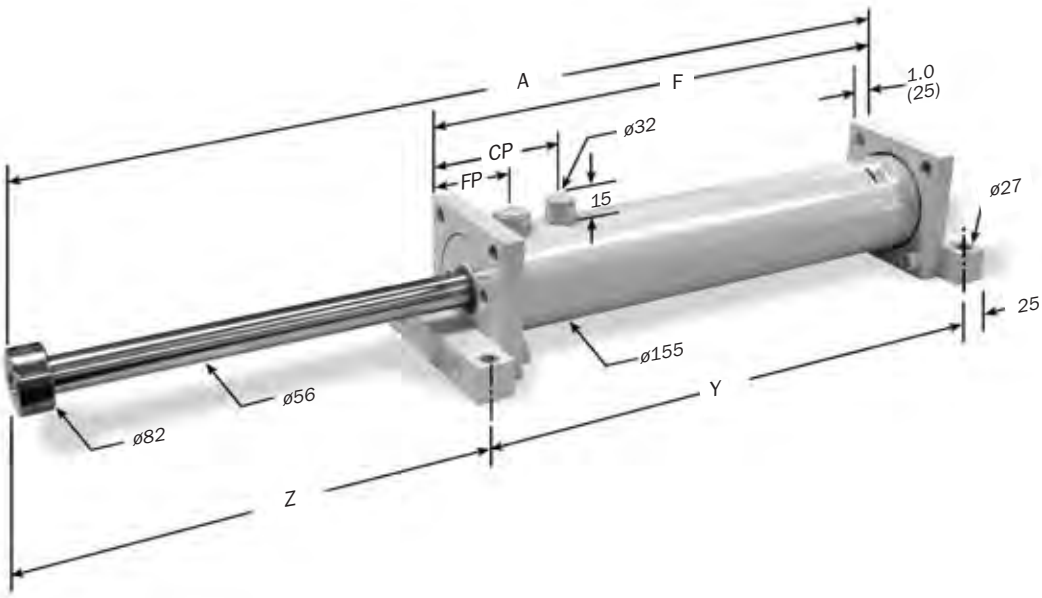

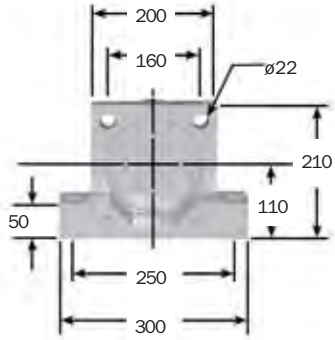

** HDN w/o BA option contains only a single charge/fill port.
* Denotes Shock Absorber Bladder Accumulator Option.

Dimensions are in millimeters.

Note: For TF, FF and FR mounting, delete front foot and dimensions.

Catalog No./ Model	(S) Stroke mm	(E_T) Max. Nm/cycle	(E_TC) Max. Nm/hr	(F_P) Max. Shock Force N	Nominal Return Force BA* N	Nominal Return Force w/o BA* N	A mm	F mm	Y mm	Z mm	With BA CP BA* mm	With BA FP BA* mm	CP** w/o BA* mm	Mass Kg
HDN 3.5 x 2	50	13 000	781 000	300 250	960	2 020	354	244	294	85	134	77	52	33
HDN 3.5 x 4	100	26 000	993 500	300 250	1 020	2 710	456	295	345	136	134	77	52	37
HDN 3.5 x 6	150	38 800	1 161 900	300 250	1 160	4 480	556	345	395	186	134	77	52	41
HDN 3.5 x 8	200	50 900	1 333 600	300 250	1 180	4 480	658	396	446	237	134	77	52	45
HDN 3.5 x 10	250	60 800	1 505 400	300 250	1 200	4 480	760	447	497	288	134	77	52	49
HDN 3.5 x 12	300	70 800	1 677 200	300 250	1 200	4 480	862	498	548	339	134	77	52	53
HDN 3.5 x 16	400	90 500	2 017 300	300 250	1 225	4 480	1 064	599	649	440	134	77	52	60
HDN 3.5 x 20	500	118 800	2 546 100	300 250	1 225	4 480	1 323	756	806	542	189	132	52	74
HDN 3.5 x 24	600	138 700	2 889 600	300 250	1 250	4 480	1 527	858	908	644	189	132	52	81
HDN 3.5 x 28	700	158 500	3 229 700	300 250	1 250	4 480	1 729	959	1 009	745	189	132	52	89
HDN 3.5 x 32	800	178 400	3 573 200	300 250	1 250	4 480	1 933	1 061	1 111	847	189	132	52	97
HDN 3.5 x 36	900	198 300	3 916 800	260 200	1 250	4 480	2 137	1 163	1 213	949	189	132	52	105
HDN 3.5 x 40	1 000	216 800	4 256 900	215 700	1 250	4 480	2 339	1 264	1 314	1 050	189	132	52	112
HDN 3.5 x 48	1 200	247 200	4 930 500	155 700	1 250	4 480	2 739	1 464	1 514	1 250	189	132	52	128
HDN 3.5 x 56	1 400	273 300	5 604 000	112 500	2 100	4 480	2 739	1 464	1 514	1 250	908	132	52	128

Notes: 1. HDN shock absorbers will function satisfactorily at 5% of their maximum rated energy per cycle. If less than these values, a smaller model should be specified.
2. It is recommended that the customer consult ITT Enidine for safety-related overhead crane applications.
3. The energy data listed is for ideal linear impacts only. If side load conditions exist in the application, contact ITT Enidine for sizing assistance.
4. Rear flange mounting of 300 mm strokes and longer not recommended. Front and rear flange or foot mount configurations are recommended.
5. Maximum cycle rate is 60 cycles/hr. for HDN with BA (Bladder Accumulator) option and 30 cycles/hr. without BA option.
6. For impact velocities over 4.5 m/s, consult factory.
7. ** HDN 3.5 x 56 has two charge ports.

ITT
ENGINEERED FOR LIFE
www.enidine.eu Email: info@enidine.eu Tel.: +49 6063 9314 0 Fax: +49 6063 9314 44

Heavy Duty Series Shock Absorber
HDN 4.0 Series

HDN 4.0 x 2 → HDN 4.0 x 48 Series

Technical Data

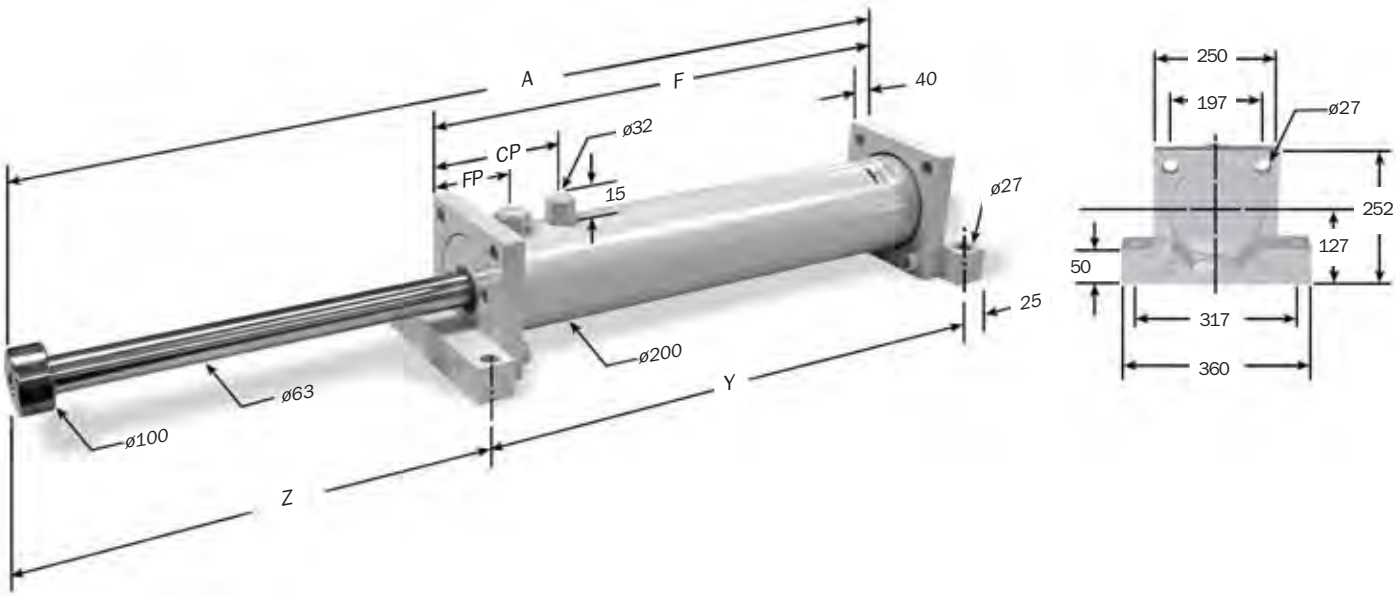

** HDN w/o BA option contains only a single charge/fill port.
* Denotes Shock Absorber Bladder Accumulator Option.

Dimensions are in millimeters.

Note: For TF, FF and FR mounting, delete front foot and dimensions.

Catalog No./ Model	(S) Stroke mm	(E_T) Max. Nm/cycle	(E_TC) Max. Nm/hr	(F_P) Max. Shock Force N	Nominal Return Force BA* N	Nominal Return Force w/o BA* N	A mm	F mm	Y mm	Z mm	With BA CP BA* mm	With BA FP BA* mm	CP** w/o BA* mm	Mass Kg
HDN 4.0 x 2	50	15 700	943 700	355 900	1 100	1 900	430	294	344	111	206	108	64	64
HDN 4.0 x 4	100	31 200	1 534 300	355 900	1 200	2 160	532	345	395	162	206	108	64	70
HDN 4.0 x 6	150	46 279	1 756 700	355 900	1 200	3 050	632	395	445	212	206	108	64	76
HDN 4.0 x 8	200	62 000	1 987 900	355 900	1 200	4 370	735	447	497	263	206	108	64	82
HDN 4.0 x 10	250	77 100	2 210 300	355 900	1 200	5 465	836	497	547	314	206	108	64	87
HDN 4.0 x 12	300	92 600	1 855 100	355 900	1 225	4 440	1 032	642	692	365	300	202	64	108
HDN 4.0 x 16	400	123 100	3 304 300	355 900	1 225	5 650	1 234	743	793	466	300	202	64	120
HDN 4.0 x 20	500	154 000	3 757 900	355 900	1 245	5 145	1 438	845	895	568	300	202	64	131
HDN 4.0 x 24	600	184 800	4 211 500	355 900	1 245	5 675	1 642	947	997	670	300	202	64	144
HDN 4.0 x 28	700	215 100	4 660 700	355 900	1 245	5 675	1 844	1 048	1 098	771	300	202	64	157
HDN 4.0 x 32	800	240 500	5 114 300	355 900	1 245	5 675	2 048	1 150	1 200	873	300	202	64	170
HDN 4.0 x 36	900	265 900	5 567 900	355 900	1 245	5 675	2 252	1 252	1 302	975	300	202	64	183
HDN 4.0 x 40	1 000	289 900	6 017 100	355 900	1 245	5 675	2 454	1 353	1 403	1 076	300	202	64	195
HDN 4.0 x 48	1 200	329 300	6 919 900	200 000	1 245	5 675	2 854	1 556	1 606	1 273	300	202	64	220

Notes: 1. HDN shock absorbers will function satisfactorily at 5% of their maximum rated energy per cycle. If less than these values, a smaller model should be specified.
2. It is recommended that the customer consult ITT Enidine for safety-related overhead crane applications.
3. The energy data listed is for ideal linear impacts only. If side load conditions exist in the application, contact ITT Enidine for sizing assistance.
4. Rear flange mounting of 300 mm strokes and longer not recommended. Front and rear flange or foot mount configurations are recommended.
5. Maximum cycle rate is 60 cycles/hr. for HDN with BA (Bladder Accumulator) option and 30 cycles/hr. without BA option.
6. For impact velocities over 4.5 m/s, consult factory.

Heavy Duty Adjustable Series Shock Absorber

HDA 3.0 Series

HDA 3.0 x 2 → HDA 3.0 x 12 Series

Technical Data

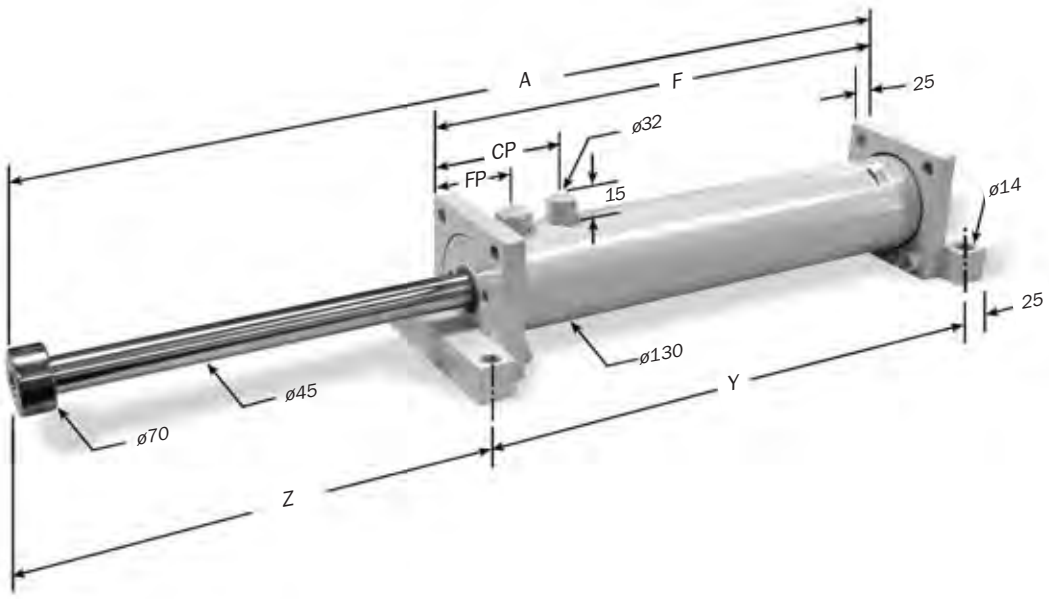

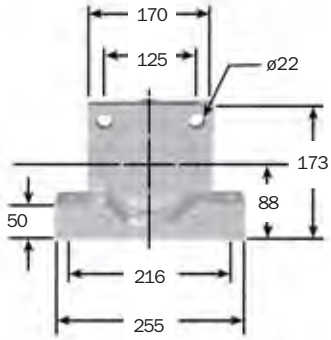

Dimensions are in millimeters.

Note: For TF, FF and FR mounting, delete front foot and dimensions.

Catalog No./ Model	(S) Stroke mm	(E_T) Max. Nm/cycle	(E_TC) Max. Nm/hr	(F_P) Max. End Shock Force N	Nominal Return Force BA* N	A mm	F mm	Y mm	Z mm	With BA CP* mm	With BA FP* mm	Mass Kg
HDA 3.0 x 2	50	4 500	271 200	222 400	660	336	213	263	98	112	61	21
HDA 3.0 x 3	75	6 800	406 700	222 400	710	387	239	289	123	112	61	22
HDA 3.0 x 5	125	11 300	677 900	222 400	730	489	290	340	174	112	61	25
HDA 3.0 x 8	200	18 100	1 050 300	222 400	765	640	365	415	250	112	61	29
HDA 3.0 x 10	250	22 600	1 197 100	222 400	775	742	416	466	301	112	61	32
HDA 3.0 x 12	300	27 200	1 343 800	222 400	775	844	467	517	352	112	61	35

Notes: 1. HDA shock absorbers will function satisfactorily at 5% of their maximum rated energy per cycle. If less than these values, a smaller model should be specified.
2. It is recommended that the customer consult ITT Enidine for safety-related overhead crane applications.
3. The energy data listed is for ideal linear impacts only. If side load conditions exist in the application, contact ITT Enidine for sizing assistance.
4. Rear flange mounting of 300 mm strokes and longer not recommended. Front and rear flange or foot mount configurations are recommended.
5. Maximum cycle rate is 60 cycles/hr.
6. HDA models which have an impact velocity below .8 m/sec., please contact ITT Enidine for assistance.
7. Maximum allowable applied propelling force: 111 200 N

Adjustment Techniques

Useable Adjustment Setting Range

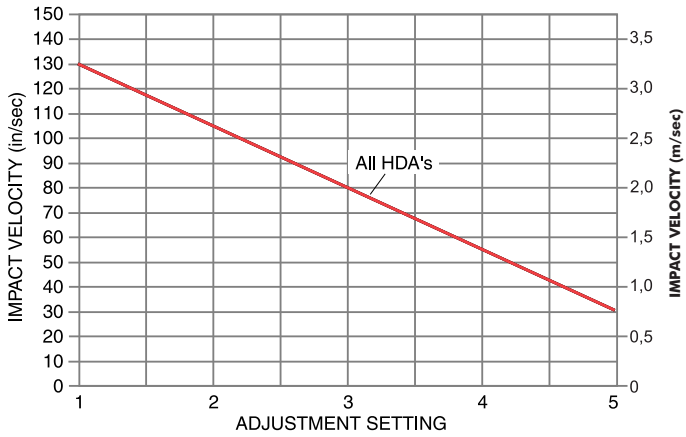

After properly sizing an HDA shock absorber, the useable range of adjustment settings can be determined:

1. Locate the intersection point of the application's impact velocity and the HDA model graph line.
2. The intersection is the maximum adjustment setting to be used. Adjustments exceeding this setting could overload the shock absorber.
3. The useable adjustment setting range is from setting 1 to the MAXIMUM adjustment setting as determined in step 2.

EXAMPLE: HDA Series

1. Impact Velocity:	2 m/s
2. Intersection Point:	Adjustment Setting 3
3. Useable Adjustment Setting Range:	1 to 3

ITT
ENGINEERED FOR LIFE
www.enidine.eu Email: info@enidine.eu Tel.: +49 6063 9314 0 Fax: +49 6063 9314 44

Heavy Duty Adjustable Series Shock Absorber

HDA 4.0 Series

HDA 4.0 x 2 → HDA 4.0 x 10 Series

Technical Data

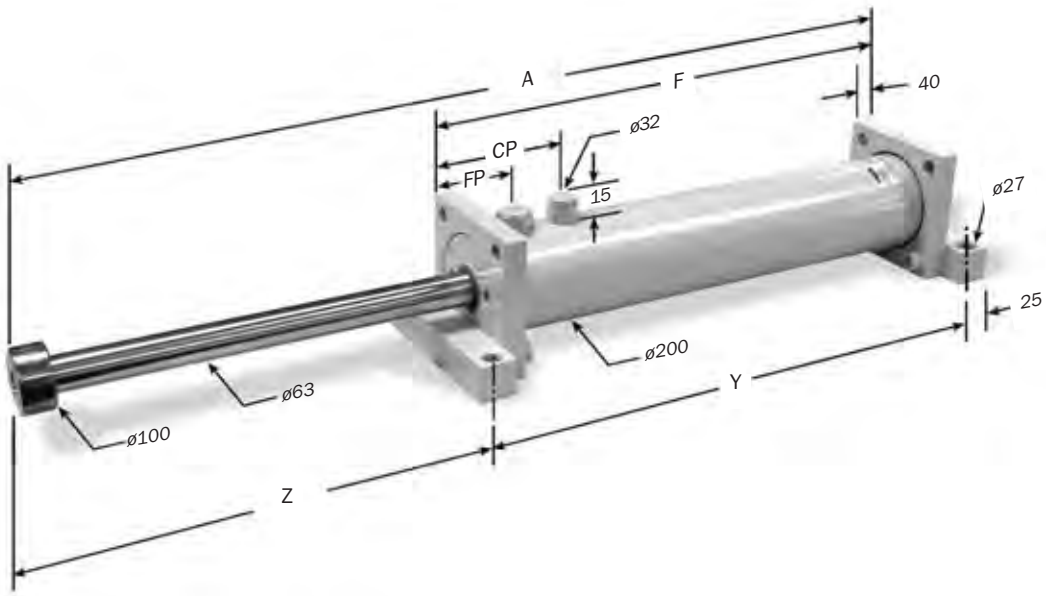

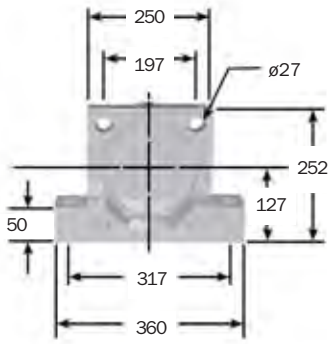

Dimensions are in millimeters.

Note: For TF, FF and FR mounting, delete front foot and dimensions.

Catalog No./ Model	(S) Stroke mm	(E_T) Max. Nm/cycle	(E_TC) Max. Nm/hr	(F_P) Max. End Shock Force N	Nominal Return Force BA* N	A mm	F mm	Y mm	Z mm	With BA CP* mm	With BA FP* mm	Mass Kg
HDA 4.0 x 2	50	13 600	813 500	355 900	1 125	430	304	354	101	180	108	64
HDA 4.0 x 4	100	27 100	1 578 800	355 900	1 125	532	355	405	152	180	108	70
HDA 4.0 x 6	150	40 700	1 801 100	355 900	1 125	632	405	455	202	180	108	76
HDA 4.0 x 8	200	54 200	2 032 400	355 900	1 125	735	457	507	253	180	108	82
HDA 4.0 x 10	250	67 800	2 254 700	355 900	1 125	836	507	557	304	180	108	87

Notes: 1. HDA shock absorbers will function satisfactorily at 5% of their maximum rated energy per cycle. If less than these values, a smaller model should be specified.
2. It is recommended that the customer consult ITT Enidine for safety-related overhead crane applications.
3. The energy data listed is for ideal linear impacts only. If side load conditions exist in the application, contact ITT Enidine for sizing assistance.
4. Rear flange mounting of 300 mm strokes and longer not recommended. Front and rear flange or foot mount configurations are recommended.
5. Maximum cycle rate is 60 cycles/hr.
6. HDA models which have an impact velocity below .8 m/sec., please contact Enidine for assistance.
7. Maximum allowable applied propelling force: 177 900 N

Damping Force

Position 1 provides minimum damping force.
Position 5 provides maximum damping force.

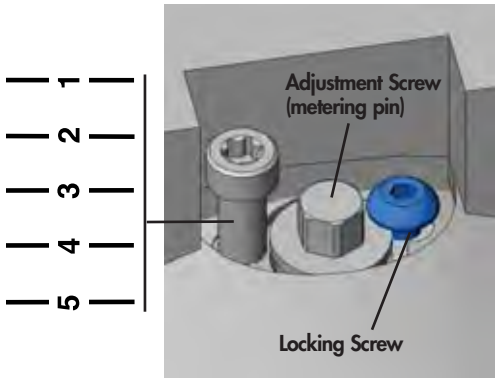

Adjusment Technique

1. Loosen button head lock screw.

2. Set adjustment screw to desired setting.

3. Tighten button head lock screw on shoulder of adjustment screw.

Heavy Duty Series Shock Absorber
HD Series

HD Series
Custom-orificed design accommodates specified damping requirements. Computer generated output performance simulation is used to optimize the orifice configuration. Available in standard bore dimensions of up to 5 in. (125mm) and 6 in. (156mm) with strokes over 60 in. (1525mm).

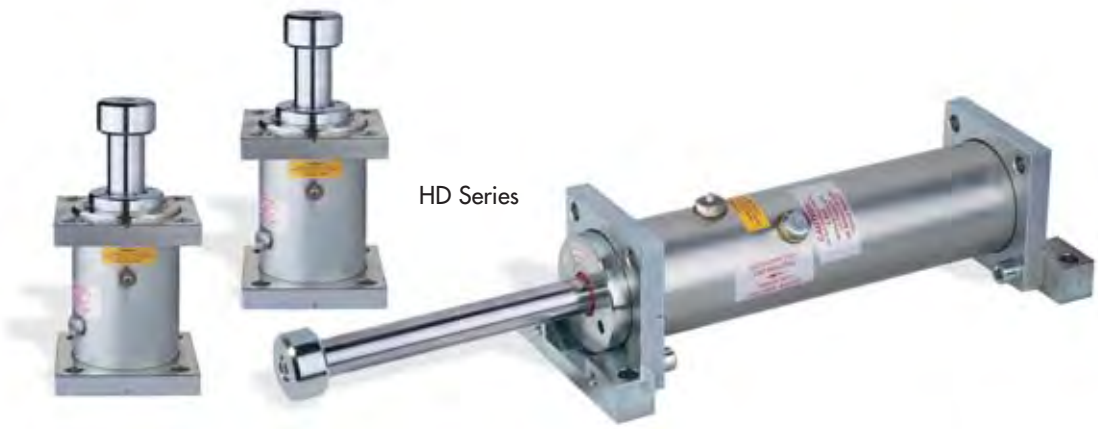

Features and Benefits HD

- Compact design smoothly and safely decelerates large energy capacity loads up to 900 000 Nm.
- Engineered to meet OSHA, AISE, CMAA and other safety specifications such as DIN and FEM.
- Internal air charged bladder accumulator replaces mechanical return springs, providing shorter overall length and reduced weight.
- Wide variety of optional configurations including bellows, clevis mounts and safety cables.
- Available in standard adjustable or custom-orificed non-adjustable models.
- Zinc plated external components provide enhanced corrosion protection.
- Epoxy painting and special rod materials are available for use in highly corrosive environments.
- All sizes are fully field repairable.
- Piston rod extension sensor systems available for reuse safety requirements.
- Incorporating optional fluids and seal packages can expand standard operating temperature range from –10°C to 60°C to –40°C to 100°C.

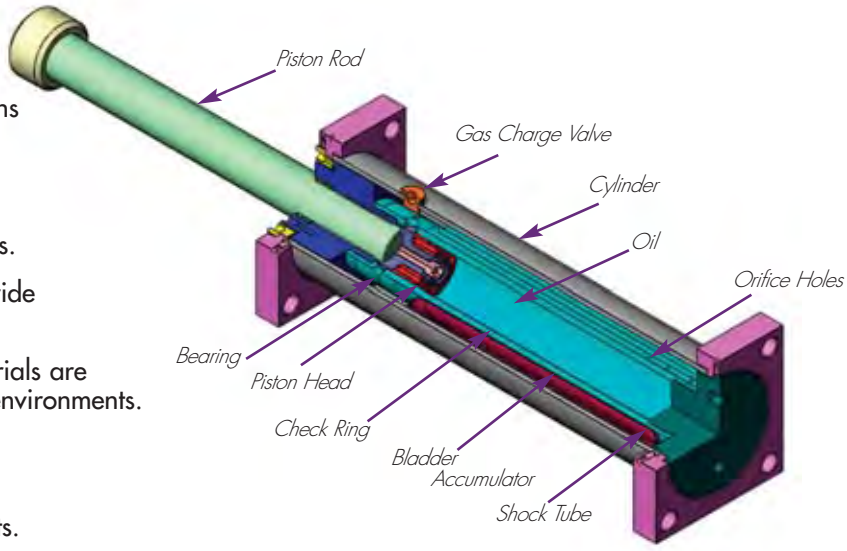

ITT
ENGINEERED FOR LIFE
www.enidine.eu Email: info@enidine.eu Tel.: +49 6063 9314 0 Fax: +49 6063 9314 44

Heavy Duty Series Shock Absorber

HD 5.0 Series

HD 5.0 x 4 → HD 5.0 x 48 Series

Technical Data

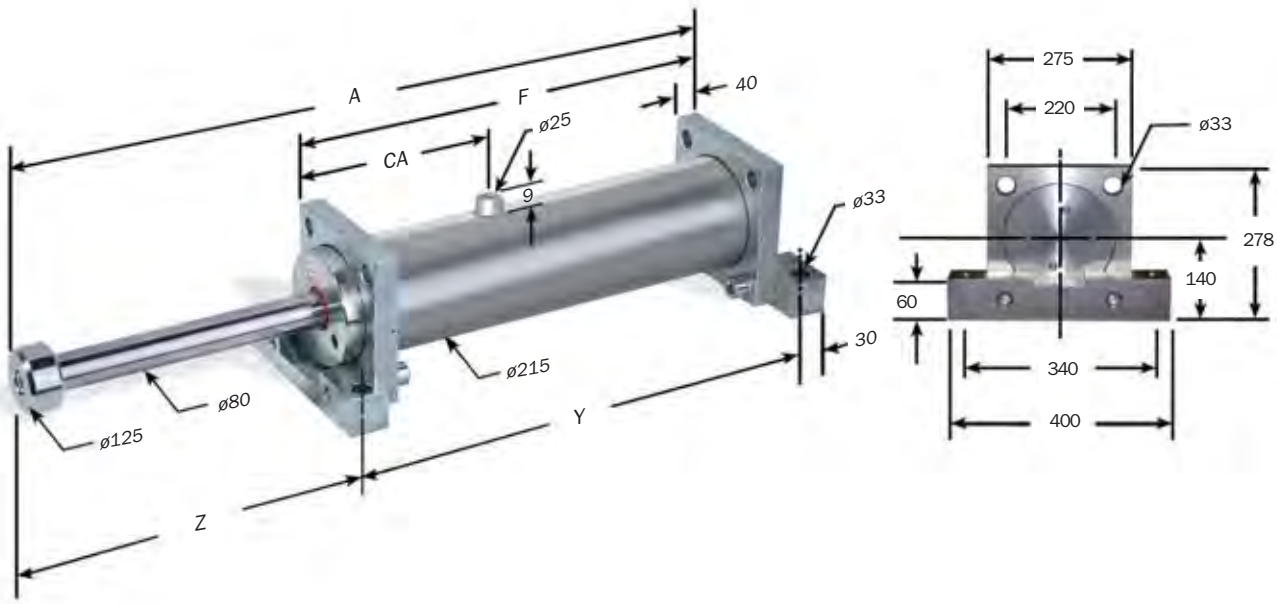

Dimensions are in millimeters.

Note: For TF, FF and FR mounting, delete front foot and dimensions.

Catalog No./ Model	(S) Stroke mm	(E_T) Max. Nm/cycle	(E_TC) Max. Nm/hr	(F_P) Max. Shock Force N	Nominal Return Force BA* N	A mm	F mm	Y mm	Z mm	CA mm	Mass Kg
HD 5.0 x 4	100	46 700	1 762 621	550 000	1 760	591	37.5	435	186	230	87
HD 5.0 x 6	150	70 000	2 002 337	550 000	1 760	693	426	486	237	230	94
HD 5.0 x 8	200	93 500	2 242 053	550 000	1 760	795	477	537	288	230	101
HD 5.0 x 10	250	117 000	2 477 070	550 000	1 760	895	527	587	338	230	108
HD 5.0 x 12	300	140 000	2 716 786	550 000	1 760	997	578	638	389	230	114
HD 5.0 x 16	400	187 000	3 196 219	550 000	1 760	1 201	680	740	491	230	128
HD 5.0 x 20	500	234 000	4 145 684	550 000	1 760	1 504	882	942	592	230	158
HD 5.0 x 24	600	280 000	4 625 117	550 000	1 760	1 708	984	1 044	694	230	171
HD 5.0 x 28	700	327 000	5 099 849	550 000	1 760	1 910	1 085	1 145	795	230	185
HD 5.0 x 32	800	374 000	5 579 282	550 000	1 760	2 114	1 187	1 247	897	230	198
HD 5.0 x 40	1 000	467 000	6 533 447	550 000	1 760	2 520	1 390	1 450	1 100	231	225
HD 5.0 x 48	1 200	535 800	7 487 613	410 000	1 760	2 920	1 590	1 650	1 300	230	242

Notes: 1. HD shock absorbers will function satisfactorily at 5% of their maximum rated energy per cycle.
HDA models will function satisfactorily at 10% of their maximum rated energy per cycle. If less than these values, a smaller model should be specified.
2. It is recommended that the customer consult ITT Enidine for safety-related overhead crane applications.
3. The energy data listed is for ideal linear impacts only. If side load conditions exist in the application, contact ITT Enidine for sizing assistance.
4. Rear flange mounting of 300 mm strokes and longer not recommended. Front and rear flange or foot mount configurations are recommended.
5. Maximum cycle rate is 60 cycles/hr.
6. For impact velocities over 4.5 m/s, consult factory.

Heavy Duty Series Shock Absorber

HD 6.0 Series

HD 6.0 x 4 → HD 6.0 x 48 Series

Technical Data

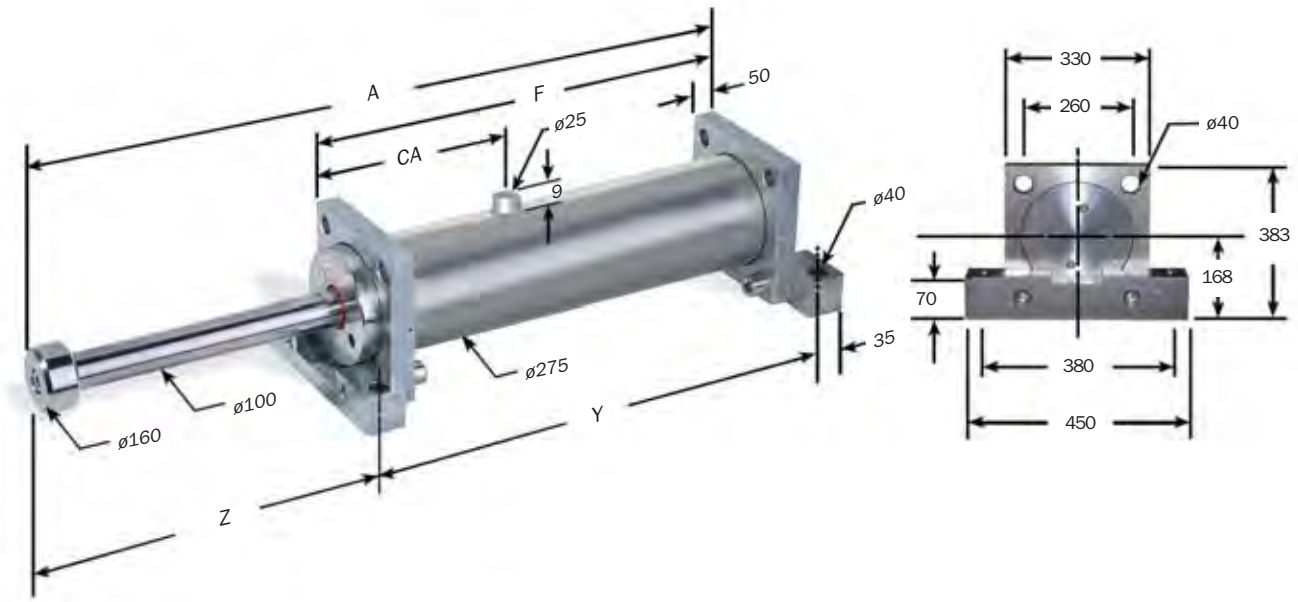

Dimensions are in millimeters.

Note: For TF, FF and FR mounting, delete front foot and dimensions.

Catalog No./ Model	(S) Stroke mm	(E_T) Max. Nm/cycle	(E_TC) Max. Nm/hr	(F_P) Max. Shock Force N	Nominal Return Force BA* N	A mm	F mm	Y mm	Z mm	CA mm	Mass Kg
HD(A) 6.0 x 4	100	76 500	2 404 568	900 000	2 750	637	391	461	211	197	164
HD(A) 6.0 x 6	150	114 000	2 704 389	900 000	2 750	737	441	511	261	197	175
HD(A) 6.0 x 8	200	153 000	3 004 211	900 000	2 750	839	492	562	312	197	186
HD(A) 6.0 x 10	250	191 000	3 316 025	900 000	2 750	941	543	613	363	197	196
HD(A) 6.0 x 12	300	224 000	3 621 843	900 000	2 750	1 043	594	664	414	197	207
HD 6.0 x 16	400	306 000	4 233 478	900 000	2 750	1 246	696	766	515	197	228
HD 6.0 x 20	500	382 000	4 845 114	900 000	2 750	1 450	798	868	617	197	250
HD 6.0 x 24	600	459 000	6 086 375	900 000	2 750	1 769	1 015	1 085	719	312	309
HD 6.0 x 30	750	573 000	6 997 832	900 000	2 750	2 073	1 167	1 237	871	312	341
HD 6.0 x 36	900	688 500	7 915 285	900 000	2 750	2 379	1 320	1 390	1 024	312	373
HD 6.0 X 42	1 050	803 000	8 826 743	900 000	2 750	2 683	1 472	1 542	1 176	312	405
HD 6.0 x 48	1 200	898 200	9 744 196	750 000	2 750	2 989	1 625	1 695	1 329	312	438

Notes: 1. HD shock absorbers will function satisfactorily at 5% of their maximum rated energy per cycle.
HDA models will function satisfactorily at 10% of their maximum rated energy per cycle. If less than these values, a smaller model should be specified.
2. It is recommended that the customer consult ITT Enidine for safety-related overhead crane applications.
3. The energy data listed is for ideal linear impacts only. If side load conditions exist in the application, contact ITT Enidine for sizing assistance.
4. Rear flange mounting of 300 mm strokes and longer not recommended. Front and rear flange or foot mount configurations are recommended.
5. HDA models which have an impact velocity below .8 m/sec., please contact ITT Enidine for sizing assistance.
6. Maximum cycle rate is 60 cycles/hr.
7. For impact velocities over 4.5 m/s, consult factory.

ITT
ENGINEERED FOR LIFE
www.enidine.eu Email: info@enidine.eu Tel.: +49 6063 9314 0 Fax: +49 6063 9314 44

Heavy Duty Series Shock Absorber

Mounting and Accessories for HDN, HD, HDA Series

Typical mounting methods are shown below. Special mounting requirements can be accommodated upon request.

TM: Rear Flange Front Foot Mount

FM: Front and Rear Foot Mount
Also shown is optional safety cable, typically used in overhead applications.

TF: Front and Rear Flanges

FF: Front Flange

CM: Clevis Mount

FR: Rear Flange

Note: Rear flange mounting not recommended for stroke lengths above 12 inches. (300 mm)

HD(A) 3.0 x 2 → HD(A) 4.0 x 10 Series

Clevis Mounts (CM)

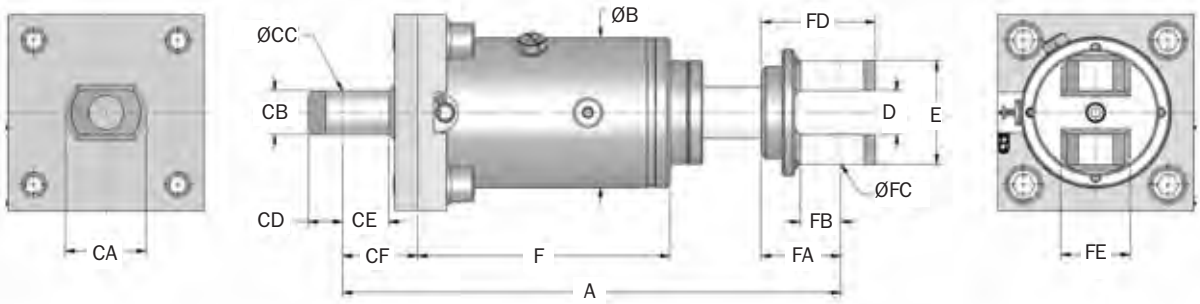

Note: Piston clevis dimensions are typical both ends on HD(A) 4.0 models.

Dimensions are in millimeters.

Catalog No./ Model	A mm	B mm	D mm	E mm	HD/HDN F mm	HDA F mm	Cylinder Clevis Dimensions						Piston Clevis Dimensions				
							CA mm	CB mm	CC mm	CD mm	CE mm	CF mm	FA mm	FB mm	FC mm	FD mm	FE mm
HD(A) 3.0 x 2	432	130	38	90	202	235	60	38	25	30	37	65	69	32	25	99	50
HD(A) 3.0 x 3	483	130	38	90	229	261	60	38	25	30	37	65	69	32	25	99	50
HD(A) 3.0 x 5	585	130	38	90	280	312	60	38	25	30	37	65	69	32	25	99	50
HD(A) 3.0 x 8	736	130	38	90	350	387	60	38	25	30	37	65	69	32	25	99	50
HD(A) 3.0 x 10	838	130	38	90	406	438	60	38	25	30	37	65	69	32	25	99	50
HD(A) 3.0 x 12	940	130	38	90	457	489	60	38	25	30	37	65	69	32	25	99	50
HD(A) 4.0 x 2	570	200	65	140	294	304	–	–	–	–	–	90	100	60	50	150	100
HD(A) 4.0 x 4	672	200	65	140	345	355	–	–	–	–	–	90	100	60	50	150	100
HD(A) 4.0 x 6	772	200	65	140	395	405	–	–	–	–	–	90	100	60	50	150	100
HD(A) 4.0 x 8	875	200	65	140	477	457	–	–	–	–	–	90	100	60	50	150	100
HD(A) 4.0 x 10	976	200	65	140	497	507	–	–	–	–	–	90	100	60	50	150	100

Heavy Duty Series Shock Absorber

Mounting and Accessories for HDN, HD, HDA Series

Optional Piston Rod Return Sensor

- Magnetic proximity sensor indicates complete piston rod return with 3 m long cable.
- If complete piston rod does not return the circuit remains open. This can be used to trigger a system shut-off.
- Contact ITT Enidine for other available sensor types.
- Sensor port in line with charge port on models HDN 1.5, 2.0 and 4.0. Location offset 90º for models HDN 3.0 and 3.5.

Sensor Specifications

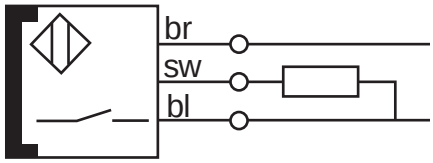

- Voltage 10 - 30V
- Load Current ≤ 200 mA
- Leakage Current ≤ 80 mA
- Load Capacitance ≤ 1.0 mF
- Ambient Temperature: -35° to 71°C

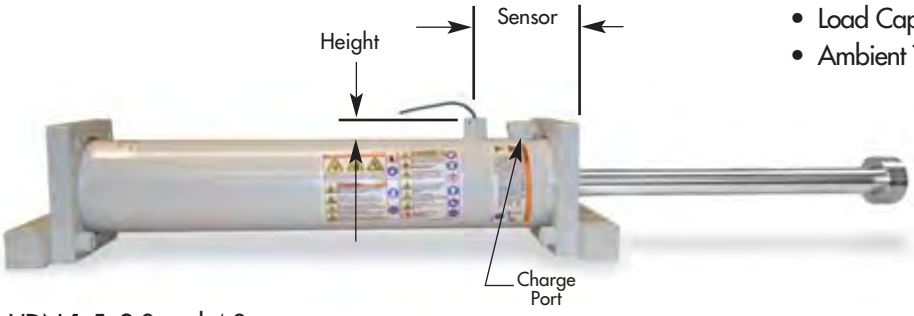

HDN 1.5, 2.0 and 4.0

Model	Sensor mm	Height mm
HDN 1.5	86	20
HDN 2.0 x 6-28	96	16
HDN 2.0 x 32-56	176	
HDN 4.0 x 2-10	108	9
HDN 4.0 x 12-48	202	

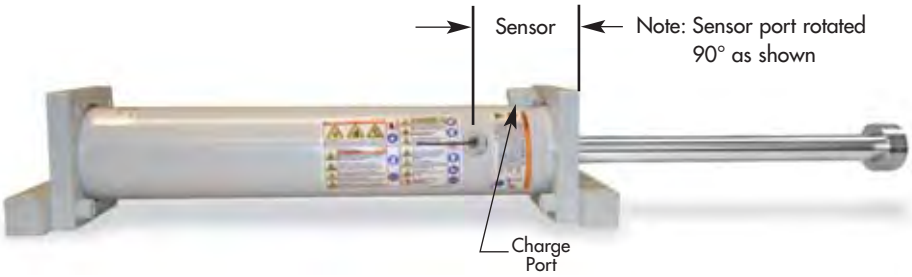

HDN 3.0 and 3.5

Model	Sensor mm	Height mm
HDN 3.0 x 2-12	61	15
HDN 3.0 x 14-32	111	
HDN 3.0 x 36-60	161	
HDN 3.5 x 2-16	77,4	9
HDN 3.5 x 20-56	132,4	

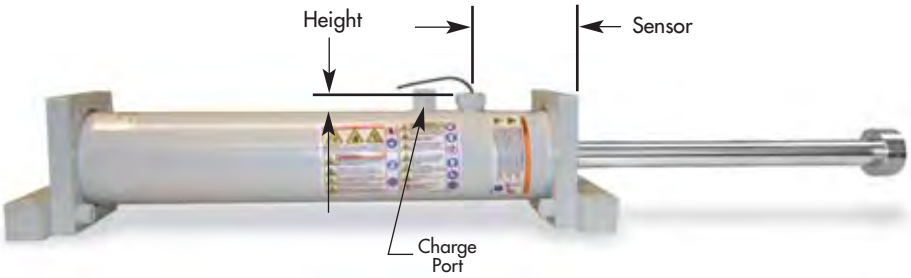

HDN 1.5, 2.0, 3.0, 3.5 and 4.0 BA

Model	Sensor mm	Height mm
HDN 1.5	86	20
HDN 2.0 x 6-28	96	16
HDN 2.0 x 32-56	176	
HDN 3.0 x 2-12	61	15
HDN 3.0 x 14-32	111	
HDN 3.0 x 36-60	161	
HDN 3.5 x 2-16	77	9
HDN 3.5 x 20-56	132	
HDN 4.0 x 2-10	108	
HDN 4.0 x 12-48	202	

Urethane Cap

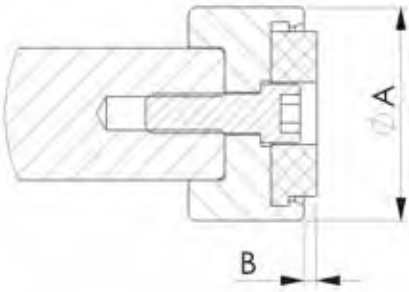

Model	Dia. A mm	B mm
HDN 1.5	60	4
HDN 2.0	65	4
HDN 3.0	70	4

ITT
ENGINEERED FOR LIFE
www.enidine.eu Email: info@enidine.eu Tel.: +49 6063 9314 0 Fax: +49 6063 9314 44

Ordering Example

Note: HDN/HD/HDA models are custom-orificed, therefore all information must be provided to ITT Enidine for unique part number assignment.

4	–	HDN	2.0	x	24	–	TM	–	C	–	APPLICATION DATA
1		2	3				4		5		

Ordering Code Example for Heavy Duty Shock Absorbers

1 - Quantity

2 - Model Selection
HDN (Non-Adjustable)
HD (Non-Adjustable)
HDA (Adjustable)

3 - Model Size
Select Size from Engineering Data Chart
HDN - 1.5, 2.0, 3.0, 3.5, 4.0 Bore Sizes (pages. 8-12)
HDA - 3.0, 4.0 Bore Sizes (pages. 13-14)
HD - 5.0, 6.0 Bore Sizes (pages. 16-17)

4 - Mounting Method
TM (Rear flange front foot mount)
FM (Front and rear foot mount)
TF (Front and rear flanges)
FF (Front flange)
FR (Rear flange)
CM (Metric clevis mount)

5 - Options
C (Sensor cable)
P (Sensor plug) - See Page 18
SC (Safety cable)
BA (Bladder Accumulator)
UC (Urethane Cap)

Application Data (Required for HDN/HD Models)
See Worksheet page 20
Vertical or horizontal motion
Weight
Impact velocity
Propelling force (if any)
Cycles/Hr
Other (temperature or other environmental conditions, safety standards, etc.)

Notes

Heavy Industry Shock Absorbers

HI Series

Overview

ITT Enidine's **Heavy Industry (HI) Series** buffers safely protect heavy machinery and equipment during the transfer of materials and movement of products. The large-bore, high-capacity buffers are individually designed to decelerate moving loads under various conditions and in compliance with industry mandated safety standards. Control of bridge cranes, trolley platforms, large container transfer and transportation safety stops are typical installation examples. Industry-proven design technologies, coupled with the experience of a globally installed product base, ensure deliverable performance that exceeds customer expectations.

Prior to HI Series buffer manufacture, computer-simulated response curves are generated to model actual conditions, verify product performance, confirm damping characteristics and generate unique custom-orificed designs that accommodate multi-condition or specific damping requirements.

Characteristics of the HI Series include a nitrogen-charged return system that allows for soft deceleration and positive return in a maintenance-free package. The oversize bore area results in optimal energy absorption capabilities and increased internal safety factors. State-of-the-art testing facilities ensure integrity of design and product performance.

HI Series

Features and Benefits

- Compact design smoothly and safely decelerates large energy capacity loads up to 500 kNm per cycle with standard stroke lengths.
- Engineered to meet OSHA, AISE, CMMA and other safety specifications such as DIN and FEM.
- Nitrogen-charged return system allows for soft deceleration and positive return in a maintenance-free package.
- Wide variety of optional configurations including protective bellows and safety cables.
- Available in custom-orificed non-adjustable models.
- Special epoxy painting and rod materials are available for use in highly corrosive environments.
- Surface treatment (Sea water resistant)
  Housing: gray color, three-part epoxy
  Piston Rod: hard-chrome plated steel.
- Incorporating optional fluids and seal packages available to expand standard operating temperature range from (–10°C to 60°C) and (–35°C to 100°C).

Ordering Information

ITT Enidine Heavy Industry (HI) Series Buffers

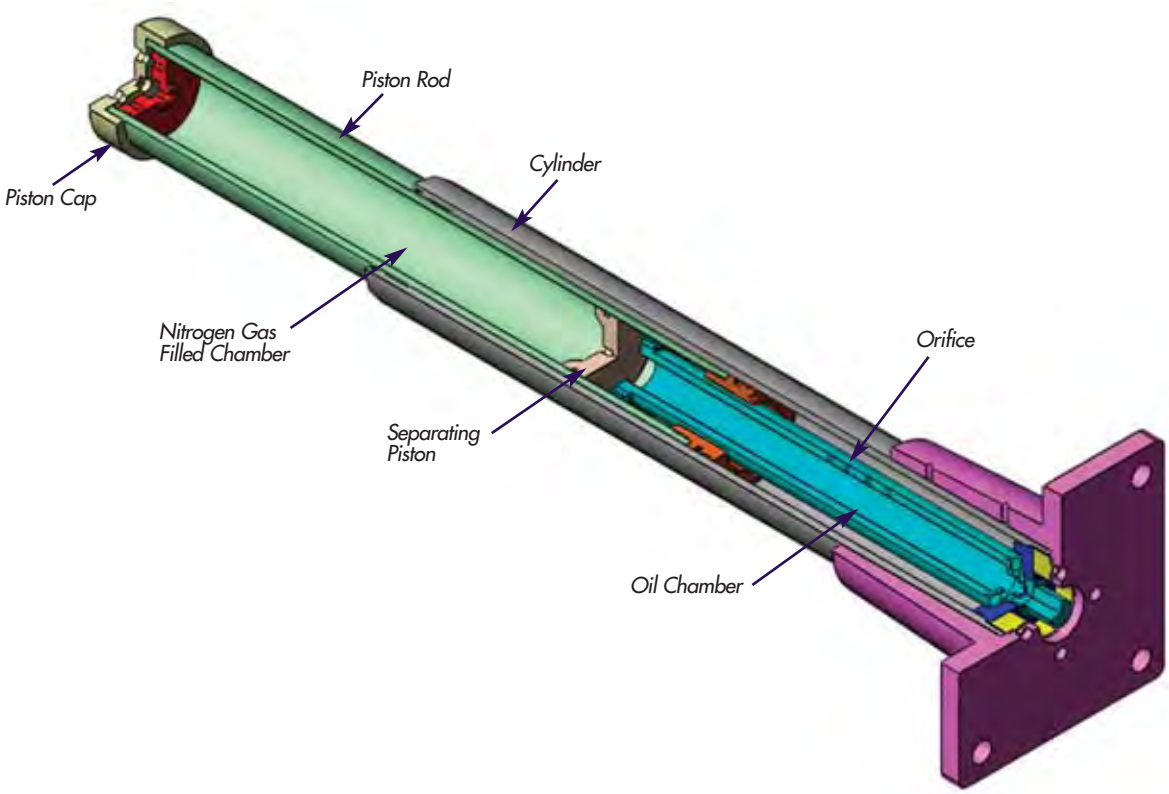

The **Heavy Industry (HI) Series** buffer design incorporates the proven damping system of multiple orifice patterns drilled down the shock tube length, for precise deceleration profiles, coupled with a nitrogen return system for controlled extension of the piston rod to its original position.

During piston movement, oil is forced through the orifice pattern into the oil reservoir chamber. This controlled movement of a piston head by decreasing the orifice area results in precise decay of impact velocity and safe deceleration of the moving load. The oil volume evacuated from the high pressure chamber moves the separating piston, compensating for the oil differential within the unit.

Extension of the piston rod for the next impact is accomplished by the force created from the compressed nitrogen chamber, which acts as both a oil volume compensator, and return force mechanism. The pressure created pushes the fluid back into the oil chamber and creates a force to reposition the piston rod to the fully extended position, ready for the next impact sequence. The nitrogen return system enables the HI Series to be designed for the maximum energy absorption within the smallest envelope size.

Ordering Example

Mounting Bracket flange:
Standard: Rear or Front mount

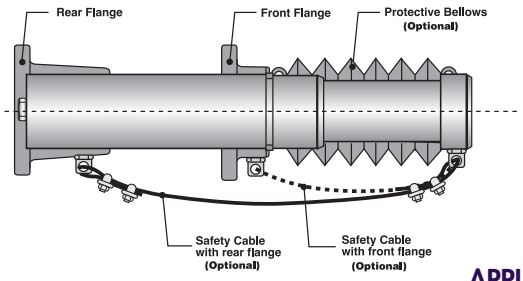

Example:

4 — Select quantity

HI 120 x 100 — Select HI Series model from Engineering Data Chart

FR — Select mounting method
- FF (Flange Front)
- FR (Flange Rear)

B — Additional Options
- B Protective bellows
- C Safety cable

APPLICATION DATA — Required for all models:
- Vertical/Horizontal Motion
- Mass
- Impact Velocity
- Propelling Force (if any)
- Cycles/Hour
- Temperature/Environment
- Applicable Standards

Heavy Industry Shock Absorbers
HI Series

HI 50 x 50 → HI 120 x 1000 Series

Technical Data

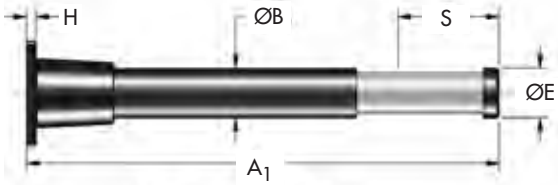

FR (FLANGE REAR)

MOUNTING FLANGE

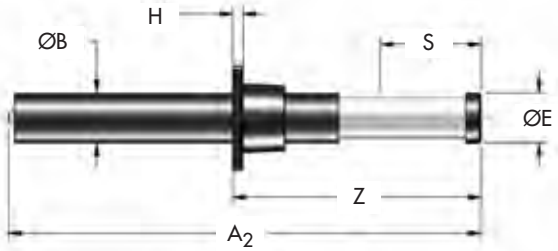

FF (FLANGE FRONT)

Catalog No./ Model	(S) Stroke mm	Max. Energy/cycle Nm/c	Max. Reaction Force kN	Return Force Extension kN	Return Force Compression kN	Mass Kg	A_1 mm	A_2 mm	Z mm	H mm	ØB mm	SA mm	SB mm	ØFC mm	BOLT SIZE mm	ØE mm
HI 50 x 50	50	3 000	70	0,5	3,2	5	262	–	–	15	65	100	70	14,5	M14	58
HI 50 x 100	100	6 200	70	0,3	6,6	9	392	–	–	15	65	100	70	14.5	M14	58
HI 85 x 50	50	6 800	160	1,0	3,6	16	324	–	–	15	85	128	89	20	M18	79
HI 85 x 100	100	13 600	160	1,0	7,6	22	424	–	–	15	85	128	89	20	M18	79
HI 100 x 50	50	10 000	235	1,7	17,0	16	302	301	175	20	100	150	120	18,5	M16	99
HI 100 x 100	100	20 000	235	1,7	18,0	22	479	473	245	20	100	150	120	18,5	M16	99
HI 100 x 150	150	30 000	235	1,7	16,6	28	618	612	300	20	100	150	120	18,5	M16	99
HI 100 x 200	400	80 000	235	1,7	16,6	46	1 349	1 345	645	20	100	150	120	18,5	M16	99
HI 100 x 400	400	80 000	235	1,7	17,5	46	1 349	1 345	645	20	100	150	120	18,5	M16	99
HI 100 x 500	500	94 000	235	1,7	24,2	52	–	1 616	890	20	100	150	120	18,5	M16	99
HI 100 x 600	600	112 000	220	1,7	24,2	58	–	1 888	1 040	20	100	150	120	18,5	M16	99
HI 100 x 800	800	136 000	200	1,7	24,2	69	–	2 426	1 345	20	100	150	120	18,5	M16	99
HI 120 x 100	100	32 000	375	2,7	34,5	34	471	467	270	20	120	220	170	26,5	M24	127
HI 120 x 150	150	48 000	375	2,7	34,5	39	597	593	330	20	120	220	170	26,5	M24	127
HI 120 x 200	200	64 000	375	2,7	34,5	43	724	720	390	20	120	220	170	26,5	M24	127
HI 120 x 300	300	94 000	375	2,7	38,0	53	973	969	520	20	120	220	170	26,5	M24	127
HI 120 x 400	400	125 000	375	2,7	38,0	87	1 225	1 221	680	25	120	220	170	26,5	M24	127
HI 120 x 600	600	188 000	375	2,7	42,8	105	–	1 725	915	25	120	220	170	26,5	M24	127
HI 120 x 800	800	225 000	330	2,7	37,4	110	–	2 332	1 290	25	120	220	170	26,5	M24	127
HI 120 x 1000	1000	260 000	300	2,7	37,4	116	–	2 836	1 360	25	120	220	170	26,5	M24	127

ITT ENGINEERED FOR LIFE
www.enidine.eu Email: info@enidine.eu Tel.: +49 6063 9314 0 Fax: +49 6063 9314 44

Heavy Industry Shock Absorbers
HI Series

HI 130 x 250 → HI 150 x 1000 Series

Technical Data

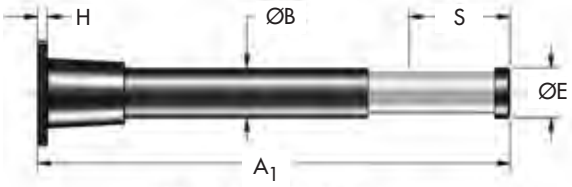

FR (FLANGE REAR)

MOUNTING FLANGE

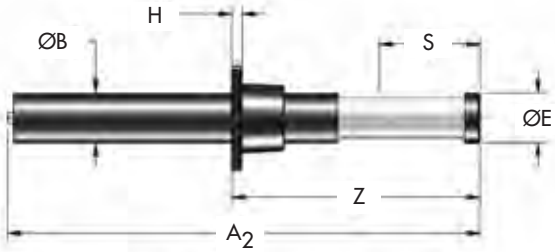

FF (FLANGE FRONT)

Catalog No./ Model	S Stroke mm	Max. Energy/cycle Nm/c	Max. Reaction Force kN	Return Force Extension kN	Return Force Compression kN	Mass Kg	A_1 mm	A_2 mm	Z mm	H mm	ØB mm	SA mm	SB mm	ØFC mm	BOLT SIZE mm	ØE mm
HI 130 x 250	250	100 000	475	3,2	50,0	72	897	894	545	25	130	270	210	26,5	M24	129
HI 130 x 300	250	100 000	475	3,2	50,0	72	897	894	545	25	130	270	210	26,5	M24	129
HI 130 x 400	400	160 000	475	3,2	50,0	90	1 293	1 289	735	25	130	270	210	26,5	M24	129
HI 130 x 600	600	210 000	400	3,2	45,0	119	–	1 917	1 055	25	130	270	210	26,5	M24	129
HI 130 x 800	800	270 000	400	3,2	45,0	140	–	2 445	1 345	25	130	270	210	26,5	M24	129
HI 150 x 115	115	62 000	645	4,5	65,7	56	516	513	320	25	150	270	210	26,5	M24	149
HI 150 x 150	150	82 000	645	4,5	65,7	59	606	602	355	25	150	270	210	26,5	M24	149
HI 150 x 400	400	220 000	645	4,5	62,4	98	1 257	1 247	710	25	150	270	210	26,5	M24	149
HI 150 x 500	500	275 000	645	4,5	75,5	110	–	1 500	770	25	150	270	210	26,5	M24	149
HI 150 x 600	600	330 000	645	4,5	75,5	120	–	1 754	875	25	150	270	210	26,5	M24	149
HI 150 x 800	800	435 500	640	4,5	68,0	165	–	2 365	1 240	25	150	270	210	26,5	M24	149
HI 150 x 1000	1000	510 000	600	4,5	61,0	180	–	2 887	1 595	25	150	270	210	26,5	M24	149

Jarret Series
BC1N, BC5, LR Series

Overview

The design of Jarret Series Industrial Shock Absorber utilizes the unique compression and shear characteristics of specially formulated silicone elastomers.

These characteristics allow the energy absorption and return spring functions to be combined into a single unit **without the need for an additional gas or mechanical spring stroke return mechanism**.

Applications
Shock protection for all types of industries including:
Defense, Automotive, Railroad, Materials Handling, Marine, Pulp/Paper, Metal Production and Processing.

Advantages:
- Simple design
- High reliability
- High damping coefficient
- Low sensitivity to temperature variances

ITT ENGINEERED FOR LIFE
www.enidine.eu Email: info@enidine.eu Tel.: +49 6063 9314 0 Fax: +49 6063 9314 44

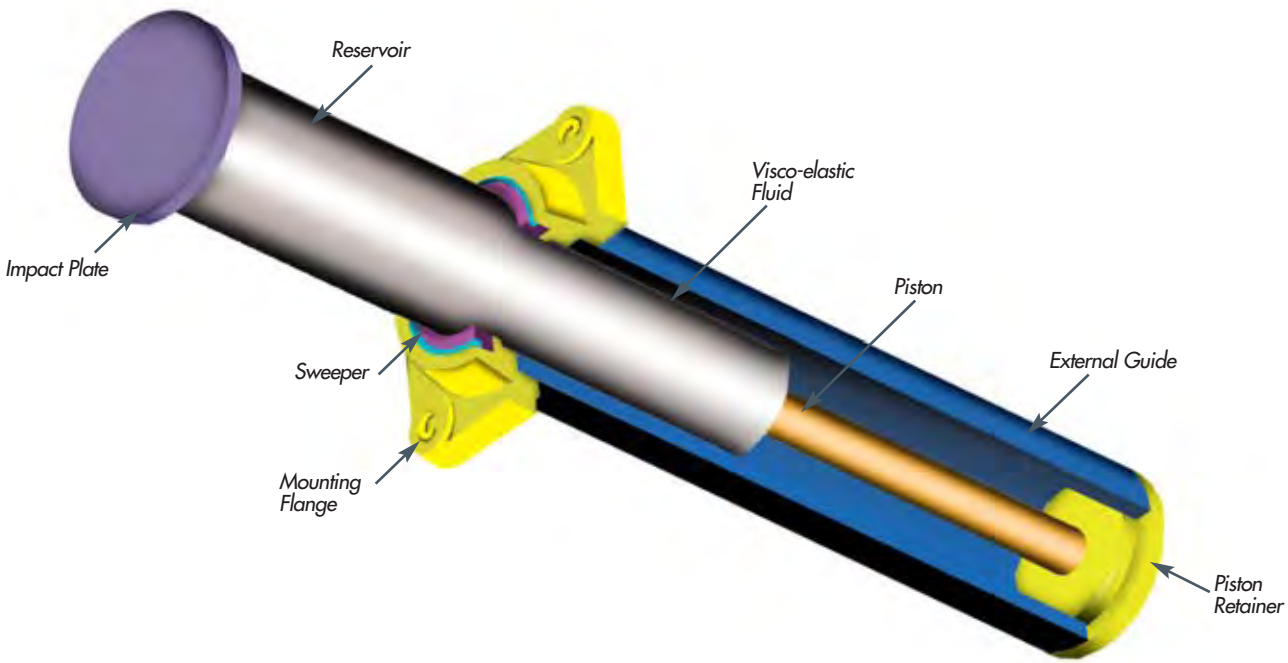

Visco-elastic technology makes use of the fundamental properties of specially formulated Jarret visco-elastic medium.

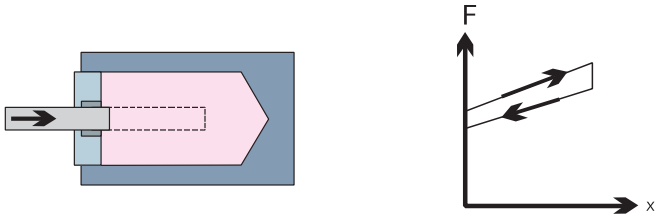

Compressibility:
Preloaded spring function
$F = F_0 + Kx$

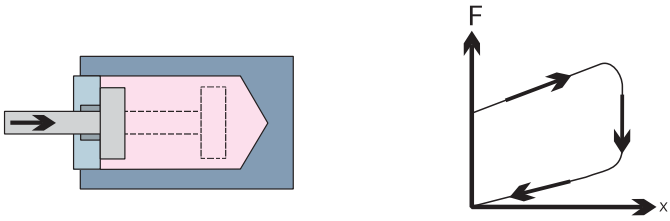

Viscosity:
Shock absorber function
$F = F_0 + Kx + CV^{\alpha}$ with α between 0,1 and 0,4

The two functions can be used separately or in combination, in the same product:

Preloaded Spring:
Spring Function Only
- Hysteresis of between 5% and 10%
- Reduced weight and space requirement
- Force/stroke characteristic is independent of actuation speed

Shock Absorber Without Spring Return:
Shock Absorbing Function Only
- Dampening devices
- Blocking devices

Preloaded Spring Shock Absorbers:
Combine Spring and Shock Absorber Functions
- Dissipate between 30% and 100% of energy
- Force/stroke characteristics remain relatively unchanged between -10°C and + 70°C

* Spring and shock absorber products are capable of functioning between -10°C and + 70°C. However, standard products are not intended for use over the full rated temperature range. Consult factory for special product considerations required to accommodate operation over a wide temperature range.

Jarret Shock Absorbers
BC1N Series

BC1ZN → BC1GN Series

Technical Data

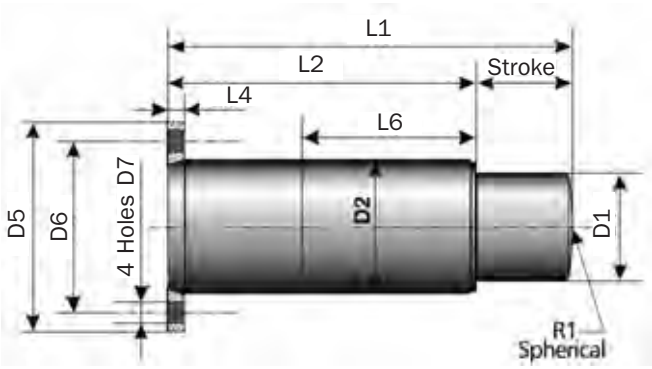

Rear Flange Mounting - Fa

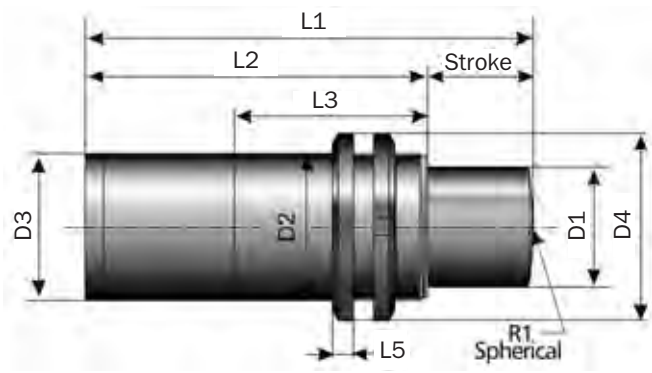

Threaded Body Mounting - Fc

Catalog No./ Model	Max Energy Capacity kJ	Stroke mm	Return Force		Rdy_0 kN	Rdymax Max Shock Force kN
			Extension kN	Compression kN		
BC1ZN	0,1	12	0,94	5,4	6	11
BC1BN	0,43	22	2,5	14,0	14	27
BC1DN	1,5	35	5,2	28,8	28	60
BC1EN	3,4	45	7,8	43,0	45	100
BC1FN	7	60	13,6	76,6	90	150
BC1GN	14	80	19,0	130,0	130	230

Catalog No./ Model	L1 mm	L2 mm	L3 mm	L4 mm	L5 mm	L6 mm	R1 mm	D1 mm	D2 mm	D3 mm	D4 mm	D5 mm	D6 mm	D7 mm	Mass Kg
BC1ZN	75	53	52	10	7	43	–	19	M25 x 1,5	20	38	57	41	7	0,3
BC1BN	120	98	96	12	8	86	–	25	M35 x 1,5	32	52	80	60	9	0,7
BC1BN-M	120	98	96	12	9	-	–	25	M40 x 1,5	32	58	–	–	–	0,8
BC1DN-70	175	140	138	12	11	128	–	38	M50 x 1,5	45	70	90	70	9	1,9
BC1DN-85	175	140	138	12	11	128	–	38	M50 x 1,5	45	70	106	85	11	2
BC1DN-M	175	140	138	12	11	–	–	38	M60 x 2	45	70	–	–	–	2
BC1EN	213	168	158	10	13	158	130	60	M75 x 2	72	98	122	100	11	5
BC1FN	270	210	130	12	16	130	150	74,5	M90 x 2	90	120	150	120	13	10,5
BC1GN	337	257	145	14	19	145	350	90	M110 x 2	110	145	175	143	18	17

Notes: 1. Spring and shock absorber products are capable of functioning between -10°C and + 70°C. However, standard products are not intended for use over the full rated temperature range.
2. Consult factory for special product considerations required to accommodate operation over a wide temperature range.

ITT ENGINEERED FOR LIFE
www.enidine.eu Email: info@enidine.eu Tel.: +49 6063 9314 0 Fax: +49 6063 9314 44

Jarret Shock Absorbers
BC1N Series

BC1ZN → BC1GN Series

Application Worksheet

1 - Selection Chart

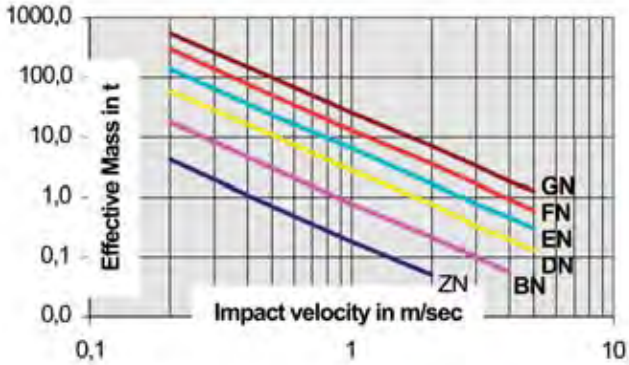

Based On

- ☐ Impact velocity (V) : 2 m/s
- ☐ Operating temperature : 20° to + 40°C
- ☐ Surface protection : Electrolytic zinc
- ☐ Dynamic performance diagram

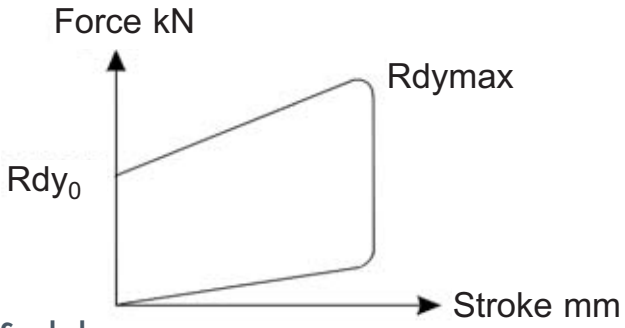

Symbols:

En = Energy Capacity (kJ)
C = Maximum Stroke (mm)
Rdy = Dynamic Reaction Force (kN)

2 - Energy Calculation

$$E = \frac{1}{2} M_e V_e^2$$

3 - Allowable Impact Velocity

$$IF < 20 \times \frac{En}{E} \text{ Impacts/hour}$$

4 - Effective (Actual) Stroke Calculation

$$Ce = C\left(\sqrt{\frac{E}{En\,(0{,}03\,V + 0{,}24)} + 1{,}36} - 1{,}17\right)$$

5 - Calculation of Effective Reaction Force Rdy_e

$$Rdy_e = \left[\left(\frac{Rdymax - Rdy_0}{C}\right) \times Ce + Rdy_0\right](0{,}1V + 0{,}8)$$

6 - Application Example

Given data: Effective mass = 15 t
Effective velocity = 0,8 m/s
Impact frequency: 25 impacts/hour

1. Energy dissipated per impact: $E = \frac{1}{2}(15)(0{,}8) = 4{,}8$ kJ

2. BC1FN Selected

3. Allowable impact frequency IF < 20x7/4,8 = 29
25 < 29

4. Effective (Actual) Stroke:

$$Ce = 60\left(\sqrt{\frac{4{,}8}{7\,(0{,}03 \times 0{,}8 + 0{,}24)} + 1{,}36} - 1{,}17\right)$$

Ce = 49 mm

5. Effective Reaction Force:

$$Rdy_e = [(\frac{150 - 90}{60}) \times 49 + 90)]\,(0{,}1 \times 0{,}8 + 0{,}8)$$

Rdy_e = 122 kN

6. Compare standards to results:

	BC1FN		APPLICATION
E (kJ) =	7	>	4,8
C (mm) =	60	>	49
Rdymax (kN)	150	>	122

All performance characteristics can be modified. Please advise us of your specific requirements.

Jarret Shock Absorbers
BC5 Series

BC5A → BC5E Series

Technical Data

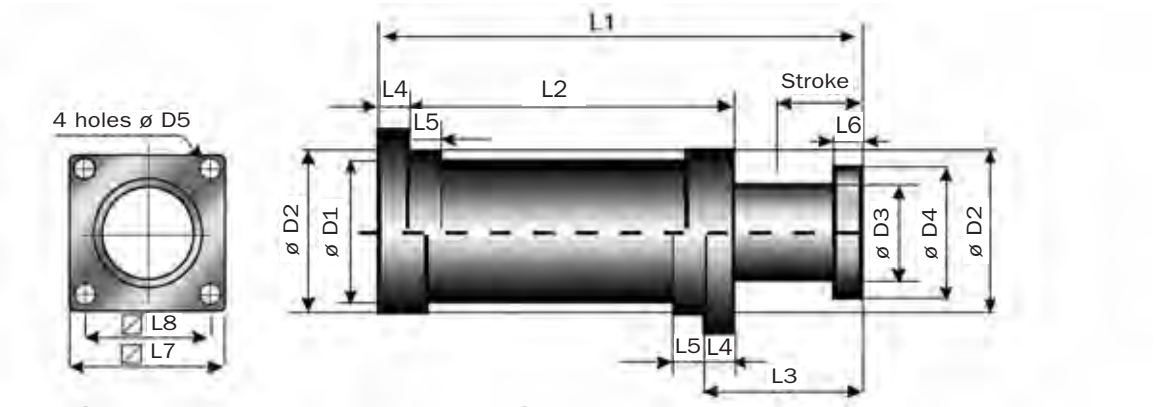

Rear Flange Mount - Fa **Front Flange Mount - Fc**

Catalog No./ Model	Max Energy Capacity kJ	Stroke mm	Return Force		Rdy_0 kN	Rdymax Max Shock Force kN
			Extension kN	Compression kN		
BC5A-105	25	105	18,5	140,7	167	310
BC5B-130	50	120	58,0	259,9	310	540
BC5C-140	75	140	49,0	328,4	400	700
BC5D-160	100	160	59,5	380,0	470	820
BC5E-180	150	180	117,0	546	640	1 100

Catalog No./ Mode	L1 mm	L2 mm	L3 mm	L4 mm	L5 mm	L6 mm	L7 mm	L8 mm	D1 mm	D2 mm	D3 mm	D4 mm	D5 mm	Mass Kg
BC5A-105	415	275	140	20	30	15	135	105	116	116	87	120	14	25
BC5B-130	500	325	175	25	33	30	155	125	142	142	115	138	14	40
BC5C-140	520	315	205	30	36	35	175	140	160	160	132	158	18	45
BC5D-160	585	350	235	35	40	40	215	170	180	180	153	185	22	73
BC5E-180	670	405	265	40	45	45	250	195	215	215	182	220	26	117

Notes: 1. Impact Speed: BC5 Series shock absorbers are designed for impact velocities of up to 4 m/sec. Higher impact velocities require custom modification.
2. Spring and shock absorber products are capable of functioning between -10°C and + 70°C. However, standard products are not intended for use over the full rated temperature range.
3. Consult factory for special product considerations required to accommodate operation over a wide temperature range.

ITT ENGINEERED FOR LIFE
www.enidine.eu Email: info@enidine.eu Tel.: +49 6063 9314 0 Fax: +49 6063 9314 44

Based On

- ☐ Impact velocity (V) : 2 m/s
- ☐ Operating temperature : 20° to + 40°C
- ☐ Surface protection : Electrolytic zinc
- ☐ Dynamic performance diagram

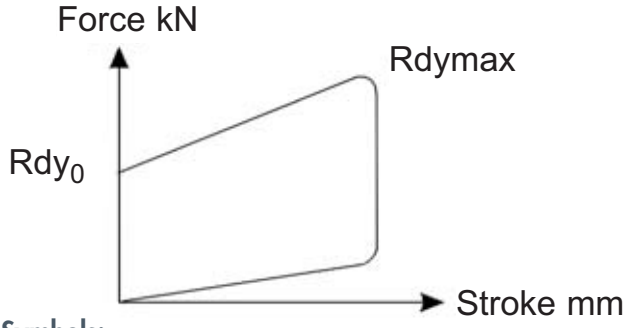

Symbols:

En = Energy Capacity (kJ)
C = Maximum Stroke (mm)
Rdy = Dynamic Reaction Force (kN)

1 - Energy Calculation

$$E = \frac{1}{2} M_e V_e^2$$

2 - Allowable Impact Frequency (IF)

$$IF < 15 \times \frac{En}{E} \text{ Impacts/hour}$$

3 - Effective Stroke Calculation

$$Ce = C \left(\sqrt{\frac{E}{En\,(0{,}03\,V + 0{,}24)}} + 1{,}36 - 1{,}17 \right)$$

4 - Calculation of Effective Reaction Rdy_e

$$Rdy_e = \left[\left(\frac{Rdymax - Rdy_0}{C} \right) \times Ce + Rdy_0 \right] (0{,}1V + 0{,}8)$$

5 - Application Example

Data: Two shock absorbers in series, Effective mass m =300 t, Impact speed v = 1,2 m/s (which is an impact of 0,6 m/s on each shock absorber), Impact frequency = 15 impacts/hour, Maximum allowable structural load 1000 kN

1: $E = \frac{1}{2} \left(\frac{1}{2} mV^2 \right)$

$E = \frac{1}{2} \left(\frac{1}{2} 300 \times 1{,}2^2 \right) = 108$ kJ

2. Selection BC5E-180

3. Maximum allowable impact frequency is $15 \times \frac{150}{108}$ 21 impacts/hour. Therefore 15 impacts/hour is acceptable.

$$15 < 15 \times \frac{150}{108}$$
$$15 < 21$$

4. Effective (actual) stroke is 167 mm

$$Ce = 180 \times \left(\sqrt{\frac{108}{150\,(0{,}03 \times 0{,}6 + 0{,}24)}} + 1{,}36 - 1{,}17 \right) = 156 \text{ mm}$$

5. $Rdye = \left[(1\,100 - 640) \times \frac{156}{180} + 640 \right] (0{,}1 \times 0{,}6 + 0{,}8)$

Rdye = 893 kN < 1000 kN

6. Compare standards to results:

	BC5E-180		APPLICATION
E (kJ) =	150	>	108
IF =	21	>	15
C (mm) =	180	>	156
Rdymax (kN)	1100	>	893

Note: maximum allowed structural load is 1 000 kN > 893 kN

All performance characteristics can be modified. Please advise us of your specific requirements.

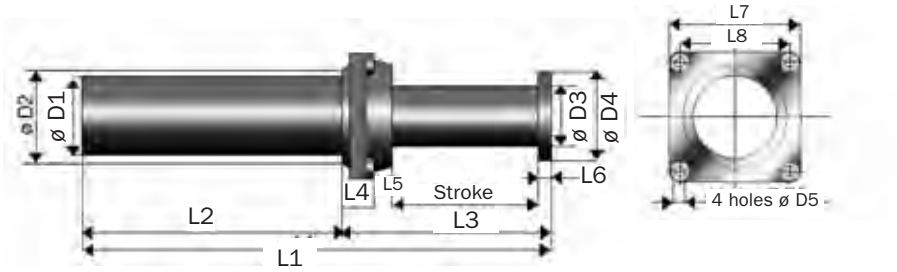

XLR Series - Front Flange Mount- Fc

Catalog No./ Model	Max Energy Capacity kJ	Stroke mm	Return Force Extension kN	Return Force Compression kN	Rdy_0 kN	Rdymax Max Shock Force kN
Δ XLR6-150	6	150	2,9	20,5	25	50
Δ XLR12-150	12	150	8,3	38,5	66	100
Δ XLR12-200	12	200	5,6	30,0	42	78
Δ XLR25-200	25	200	13,4	74,4	95	150
Δ XLR25-270	25	270	11,1	51,4	66	112
Δ XLR50-275	50	275	19,7	130,0	118	230
Δ XLR50-400	50	400	12,9	83,8	75	150
Δ XLR100-400	100	400	25,0	162,5	175	320
Δ XLR100-600	100	600	11,6	132,4	85	230
Δ XLR150-800	150	800	23,2	152,2	80	250

Notes: 1. Impact Speed: Types XLR and BCLR Series shock absorbers are designed for impact velocities of up to 2 m/sec. Higher impact velocities require custom modification.
2. Δ = Non-standard lead time items, contact ITT Enidine.

Catalog No./ Model	L1 mm	L2 mm	L3 mm	L4 mm	L5 mm	L6 mm	L7 mm	L8 mm	D1 mm	D2 mm	D3 mm	D4 mm	D5 mm	Mass Kg
ΔXLR6-150	410	231	179	19	0	10	90	70	50	90	38	50	9	4,2
ΔXLR12-150	480	285	195	18	15	12	110	85	75	90	57	80	11	11
ΔXLR12-200	530	285	245	18	15	12	110	85	75	90	57	80	11	11
ΔXLR25-200	620	370	250	20	18	12	135	105	90	110	72	100	14	20
ΔXLR25-270	690	370	320	20	18	12	135	105	90	110	72	100	14	25
ΔXLR50-275	855	520	335	25	20	15	175	140	110	150	87	120	18	40
ΔXLR50-400	980	520	460	25	20	15	175	140	110	150	87	120	18	40
ΔXLR100-400	1 370	910	460	25	20	15	175	140	110	150	87	120	18	65
ΔXLR100-600	1 570	910	660	25	20	15	175	140	110	150	87	120	18	65
ΔXLR150-800	2 640	1 780	860	25	20	15	175	140	110	150	87	120	18	115

Notes: 1. Rear Flange Mounting - Fa on Request.
2. Spring and shock absorber products are capable of functioning between -10°C and + 70°C. However, standard products are not intended for use over the full rated temperature range.
3. Consult factory for special product considerations required to accommodate operation over a wide temperature range.

XLR6-150 → XLR-800 Series

Application Worksheet

Based On

- ☐ Impact velocity (V) : 2 m/s
- ☐ Operating temperature : 20° to + 40°C
- ☐ Surface protection : Electrolytic zinc & Painting
- ☐ Dynamic performance diagram

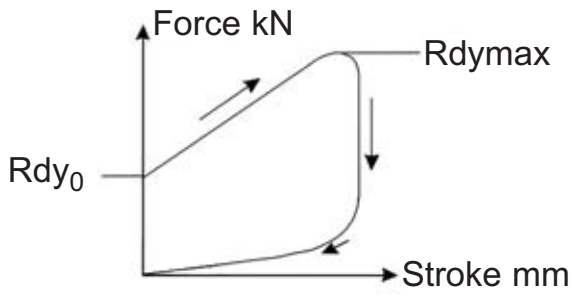

Symbols:

En = Energy Capacity (kJ)
C = Maximum Stroke (mm)
Rdy = Dynamic Reaction Force (kN)

1 - Energy Calculation

$$E = \frac{1}{2} M_e V_e^2$$

2 - Allowable Impact Frequency (IF)

$$IF < 8 \times \frac{En}{E} \text{ Impacts/hour}$$

3 - Required Stroke Calculation

$$Ce = C\left(\sqrt{\frac{E}{En\,(0{,}027\,V + 0{,}22)}} + 1{,}83 - 1{,}35\right)$$

4 - Calculation of Effective Reaction Rdy_e

$$Rdy_e = \left[\left(\frac{Rdymax - Rdy_0}{C}\right) \times Ce + Rdy_0\right](0{,}1V + 0{,}8)$$

5 - Application Example Data:

Effective mass = 30 t
Effective impact speed = 2,2
Maximum allowable structural force = 350 kN
Impact frequency = 10/hr

1: Energy dissipated/impact is 72,6 kJ

$$E = \frac{1}{2} \times 15 \times (2{,}2)^2$$

E = 72,6 kJ

2: XLR100-400 selected

3: Maximum allowable impact frequency
IF < 8 x 100 / 72,6 = 11
(10<11 impacts/hour is acceptable)

4: Effective (actual) stroke:

$$Ce = 400 \times \left(\sqrt{\frac{72{,}6}{100\,(0{,}027 \times 2{,}7 + 0{,}22)}} + 1{,}83 - 1{,}35\right)$$

Ce = 290,3 mm

5: $$Rdye = \left[\left(\frac{320 - 175}{400}\right) 290{,}3 + 175\right](0{,}1 \times 2{,}2 + 0{,}8)$$

Rdye = 285,8 kN

(which is less than maximum allowable reaction force of 350 kN)

6. Compare standards to results:

	XLR100-400		APPLICATION
E (kJ) =	100	>	72,6
IF =	11	>	10
C (mm) =	400	>	301,8
Rdymax (kN)	320	>	290,1

Note: maximum allowed structural load is 350 kN > 290,1 kN

All performance characteristics can be modified.
Please advise us of your specific requirements.

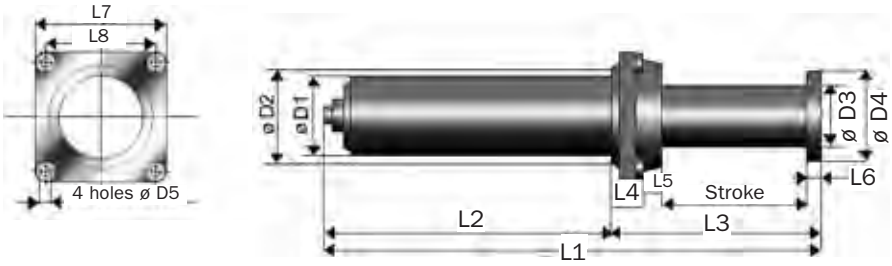

BCLR Series - Front Flange Mount- Fc

Catalog No./ Model	Max Energy Capacity kJ	Stroke mm	Return Force Extension kN	Return Force Compression kN	Rdy_0 kN	Rdymax Max Shock Force kN
ΔBCLR-100	100	400	30,0	161,9	190	310
ΔBCLR-150	150	500	41,5	201,4	200	380
ΔBCLR-220S	220	400	45,0	270,0	380	685
ΔBCLR-250	250	650	45,0	253,0	270	490
ΔBCLR-400	400	850	49,6	307,9	330	600
ΔBCLR-600	600	1 050	47,5	351,5	370	740
ΔBCLR-800	800	1 200	64,2	441,0	430	860
ΔBCLR-1000	1 000	1 300	85,0	534,0	500	1 000

Notes: 1. Impact Speed: Types XLR and BCLR Series shock absorbers are designed for impact velocities of up to 2 m/sec. Higher impact velocities require custom modification.
2. Δ = Non-standard lead time items, contact ITT Enidine.

Catalog No./ Model	L1 mm	L2 mm	L3 mm	L4 mm	L5 mm	L6 mm	L7 mm	L8 mm	D1 mm	D2 mm	D3 mm	D4 mm	D5 mm	Mass Kg
ΔBCLR-100	1 120	660	460	25	20	15	175	140	130	150	110	140	18	63
ΔBCLR-150	1 350	775	575	30	25	20	215	170	140	185	120	150	22	90
ΔBCLR-220S	1 258	783	475	30	25	20	215	170	160	N/A	134	160	22	110
ΔBCLR-250	1 750	1 025	725	30	25	20	215	170	155	185	135	170	22	135
ΔBCLR-400	2 185	1 250	935	35	25	25	265	210	175	235	150	190	27	218
ΔBCLR-600	2 555	1 420	1 135	35	25	25	265	210	200	235	175	215	27	295
ΔBCLR-800	2 935	1 630	1 305	40	35	30	300	240	220	270	190	235	30	420
ΔBCLR-1000	3 225	1 820	1 405	40	35	30	300	240	230	270	205	248	30	470

Notes: 1. Rear Flange Mounting - Fa on Request.
2. Spring and shock absorber products are capable of functioning between -10°C and + 70°C. However, standard products are not intended for use over the full rated temperature range.
3. Consult factory for special product considerations required to accommodate operation over a wide temperature range.

BCLR-100 → BCLR-1000 Series

Application Worksheet

Based On

- ☐ Impact velocity (V) : 2 m/s
- ☐ Operating temperature : 20° to + 40°C
- ☐ Surface protection : Electrolytic zinc & Painting
- ☐ Dynamic performance diagram

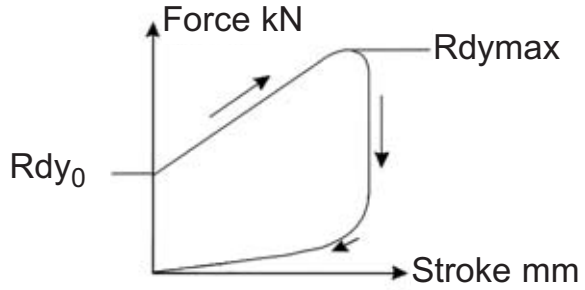

Symbols:

En = Energy Capacity (kJ)
C = Maximum Stroke (mm)
Rdy = Dynamic Reaction Force (kN)

1 - Energy Calculation

$$E = \frac{1}{2} M_e V_e^2$$

2 - Allowable Impact Frequency (IF)

$$IF < 8 \times \frac{En}{E} \text{ Impacts/hour}$$

3 - Required Stroke Calculation

$$Ce = C\left(\sqrt{\frac{E}{En\,(0{,}027\,V + 0{,}22)}} + 1{,}83 - 1{,}35\right)$$

4 - Calculation of Effective Reaction Rdy_e

$$Rdy_e = \left[\left(\frac{Rdymax - Rdy_0}{C}\right) \times Ce + Rdy_0\right](0{,}1V + 0{,}8)$$

5 - Application Example:

Effective mass = 75 t
Effective impact speed = 2,7
Maximum allowable structural force: 650 kN
Impact frequency = 10/hr

1. Energy dissipated/impact is 274 kJ

2. BCLR-400 selected

3. Maximum allowable impact frequency
   IF < 8 x 400 / 274 = 12 (10 impacts/hour is acceptable)
   10 < 12

4. Effective (actual) stroke:

$$Ce = 850 \times \left(\sqrt{\frac{274}{400\,(0{,}027 \times 2{,}7 + 0{,}22)}} + 1{,}83 - 1{,}35\right)$$

   Ce = 587mm

5. Rdye = 520 (0,1 x 2,7 + 0,8) = 556 kN

(which is less than maximum allowable reaction force of 650 kN)

6. Compare standards to results:

	BCLR-400		APPLICATION
E (kJ) =	400	>	274
IF =	12	>	10
C (mm) =	850	>	587
Rdymax (kN)	600	>	556

Note: maximum allowed structural load is 650 kN > 556 kN

All performance characteristics can be modified.
Please advise us of your specific requirements.

Rate Controls
ADA/DA Series

Overview

ITT Enidine Rate Controls are designed to regulate the speed and time required for a mechanism to move from one position to another. Adjustable and non-adjustable models are available to accommodate a wide variety of motion control applications. both single and double acting hydraulic damper designs allow smooth, controllable machine operation by providing rate control for both linear and rotational (hinged) loads. Each product family offers a variety of stroke lengths from which to choose.

Adjustable, Double Acting (ADA 500M and ADA 700M Series) rate controls regulate speed in both tension and/or compression modes independently. ADA products let the user adjust the rate to suit specific application requirements. Fixed orifice interchangeable cartridges are available for the ADA 500M Series, which provide tamperproof operation once the desired rate has been determined. An optional remote adjustment cable provides adjustment control in otherwise inaccessible locations for the ADA 500M Series.

The **DA Series** are non-adjustable, custom-orificed at factory, double acting rate controls which provide smooth, reliable motion control for high load capacities. Tow bar (TB) snubbers are specially designed DA's which dampen the abrupt starts and stops of power and free conveying systems.

Features and Benefits

- Extensive product line offers flexibility in both size and load capacities to fulfill a wide range of application requirements.
- ISO quality standards result in reliable, long-life operation.
- A select variety of surface finishes maintains original quality appearance and provides the longest corrosion resistance protection.
- Custom stroke lengths and damping characteristics can be designed to suit your application requirements.
- Incorporating optional fluids can expand the standard operational temperature range from (–10°C to –80°C) to (–30°C to –100°C).
- Special materials and finishes available to meet specific customer requirements.

ITT ENGINEERED FOR LIFE
www.enidine.eu Email: info@enidine.eu Tel.: +49 6063 9314 0 Fax: +49 6063 9314 44

Adjustable Double Acting (ADA) Series Rate Control

Overview

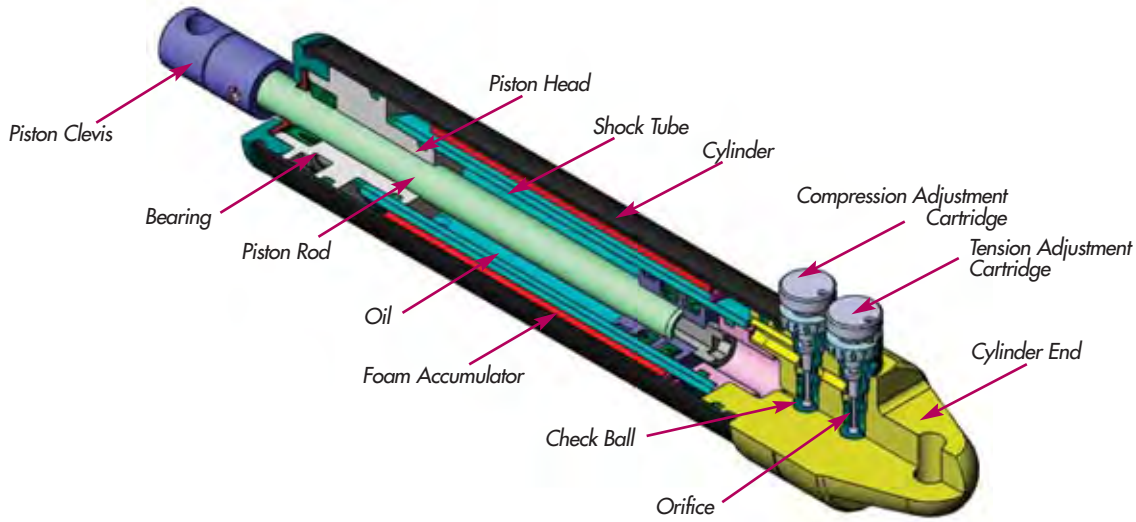

ITT Enidine Double Acting Adjustable (ADA) rate controls control the velocity of both linear and rotational loads throughout their entire motion. Adjustment cartridges on the ADA 500M Series allow flexibility in controlling the speed for an applied force in both the tension and compression directions. Maximum damping is achieved by turning the adjustment knob to the number eight (8) setting, while turning the knob to the zero (0) setting provides minimal resistance. Interchangeable, threaded, fixed-orifice cartridges can provide consistent, tamper-resistant damping to meet particular application requirements.

The ADA 500M Series utilizes two independent adjustment cartridges for motion control in each direction, housed in the cylinder end. The ADA 700M Series has independently controlled tension and compression capabilities located at each end of the unit.

Resistance is controlled by using a wrench key at either end of the rate control and adjusting the movement by following the stiffer (+) or softer (-) indications. When the rate control is compressed, the oil is orificed through the compression adjustment cartridge and flows freely through the tension adjustment cartridge. The tension cartridge check ball unseats and allows free flow of the oil to the rod end of the shock tube. A foam accumulator is utilized to accept the volume of oil displaced by the piston rod. When the rate control is extended, oil is moved through an internal flow path in the shock tube and is orificed through the tension adjustment cartridge. The compression cartridge check ball unseats and allows free flow of the oil into the blind end of the shock tube.

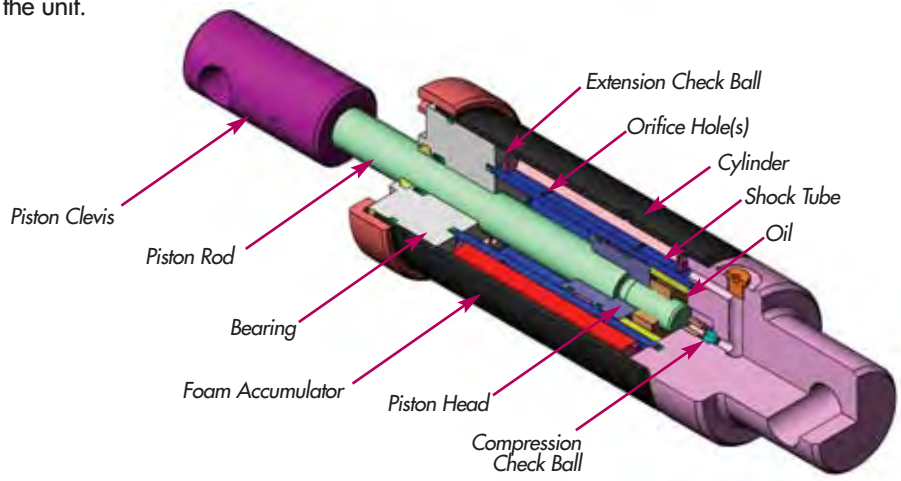

DA Series rate controls are ideally suited for high-energy, heavy load applications requiring rate control in tension, compression or both directions. These non-adjustable, custom-orificed units are designed to specific input conditions, and allow for single and multiple orifice configurations.

Upon compression of the rate control, the compression check ball seats. As the piston head moves, oil is forced through the orifice hole(s) located in the shock tube, producing the required damping force. After the oil has passed through the orifice hole(s), a portion of the oil passes through the extension check valve and fills the rod end of the shock tube. The remainder of the oil volume displaced by the piston rod compresses the foam accumulator.

Upon extension of the rate control, the extension check ball seats. As the piston head moves, oil is forced through the orifice hole(s) located in the shock tube producing the required damping force. The compression check ball is unseated by the flow of oil which fills the blind end of the shock tube.

Overview

ITT Enidine Rate Controls are used to regulate the speed or time required for a mechanism to move from one position to another. They use proven technology to enhance performance in a variety of product applications. Rate controls are typically used to control pneumatic cylinders, linear slides, lids, and other moving mechanisms.

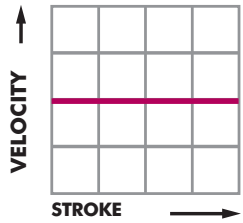

SINGLE ORIFICE RATE CONTROL
CONSTANT FORCE OPERATION

The advantages of using rate controls include:

1. **Longer Machine Life –** The use of rate controls significantly reduces shock and vibration to machinery caused by uncontrolled machine operation. This further reduces machinery damage, downtime and maintenance costs, while increasing machine life.

2. **Improved Production Quality –** Harmful effects of uncontrolled motion, such as noise, vibration and damaging impacts, are moderated or eliminated so that production quality is improved.

3. **Safer Machinery Operation –** Rate controls protect machinery and equipment operators by offering predictable, reliable and controlled machine operation.

4. **Competitive Advantage –** Machines and end products become more valuable because of increased productivity, longer life, lower maintenance and safer operation.

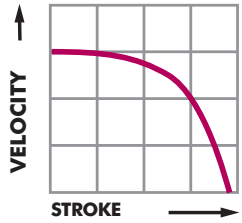

MULTIPLE ORIFICE RATE CONTROL
CONSTANT FORCE OPERATION

ITT Enidine offers a wide range of rate controls that provide motion control in tension, compression, or both directions. Adjustable and non-adjustable tamperproof models are available to fit your particular application requirements.

The resisting force provided by ITT Enidine rate controls is typically constant over the entire stroke when the piston rod is moved at a constant velocity, since the rate controls are single orifice products. DA Series models can be custom orificed to provide increasing resisting force over the stroke through the use of multiple orifices in the shock tube. This can be beneficial when controlling the velocity of a lid as it closes, since the torque from the weight of the lid changes as it closes.

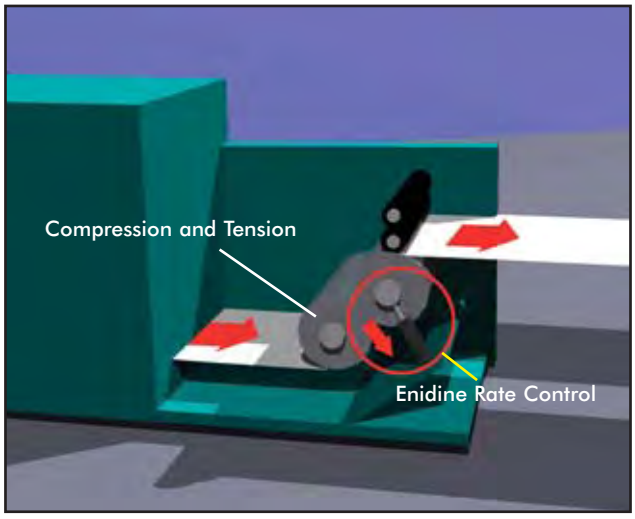

Typical Application: Print Rollers and Paper Tensioners

Rate Control Adjustment Techniques

A properly adjusted rate control safely controls machinery operation, and reduces noise levels from uncontrolled motion. To correctly adjust the rate control after it has been properly sized for the application, set the adjustment knob (per the useable adjustment setting graphs for the applicable model. Cycle the mechanism and observe the motion of the system.

If the motion of the mechanism is too fast, move the adjustment dial to the next largest number until the desired velocity is achieved.

If the motion of the mechanism is too slow, move the adjustment dial to the next smallest number until the desired velocity is achieved.

ITT ENGINEERED FOR LIFE
www.enidine.eu Email: info@enidine.eu Tel.: +49 6063 9314 0 Fax: +49 6063 9314 44

Adjustment Techniques

Useable Adjustment Setting Range

Green lines are model's maximum allowable propelling force.

ADA 500

Compression Mode Adjustment Setting Curve

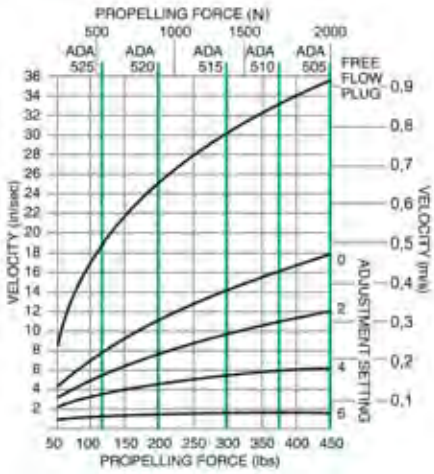

Tension Mode Adjustment Setting Curve

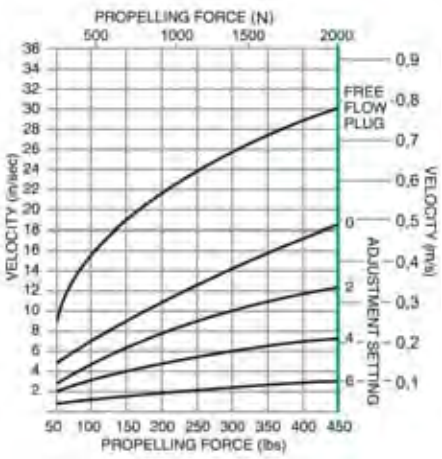

Damping Force

Position 0 provides minimum damping force.
Position 8 provides maximum damping force.
180° adjustment with setscrew locking.

1. Determine the damping direction (tension [T], compression [C] or both [T and C]), stroke (mm) required, propelling force (N), desired velocity (m/s) and cycles per hour.
2. Calculate total energy per hour (Nm/hr).
3. Compare the damping direction (T, C, or T and C), stroke (mm) required, propelling force (N) and total energy per hour (Nm/hr) to the values listed in the Rate Controls Engineering Data charts.

   NOTE: Propelling force and velocity should be measured at the location of the rate control.
4. Determine if adjustable or non-adjustable model is desired.
5. Select the appropriate rate control model.
   A. For adjustable rate control models, refer to the Useable Adjustment Settings section for the selected model to determine the proper adjustment setting.

   B. For non-adjustable rate control models, refer to the Damping Constant Selection Instructions for the selected model to determine the proper damping constant.

Example:

1. Damping Direction (T, C or T and C): T and C
   Stroke (S): 102 mm
   Propelling Force (F_D): 890 N (T and C)
   Velocity (V): 0,2 m/s
   Cycles/Hour (C): 20

2. Total Energy/Hour: 1 808 Nm/hr compression
   1 808 Nm/hr tension
   3 616 Nm/hr Total

3. Compare damping direction (T and C), stroke, propelling force and total energy per hour, to the values listed in the rate controls engineering data charts.
4. An adjustable model is desired.
5. Selection: ADA 510M (T and C), The proper adjustment is two (2) in tension and compression per the ADA 500M Series Useable Adjustment Setting Range Curves.

After properly sizing the ADA, the adjustment setting can be determined.

1. To determine the approximate adjustment setting when the selected model, propelling force, and velocity are known: compare velocity to the propelling force in the compression and/or tension mode adjustment setting curves. The intersection point of the velocity and the propelling force is the approximate adjustment setting to be used. Adjustment higher or lower than this setting will result in slower or faster damper operation, respectively.

2. To determine the velocity when the selected model, adjustment setting, and propelling force are known: compare the propelling force to the adjustment setting in the compression and/or tension mode adjustment setting curves. The intersection point of the propelling force and the adjustment setting is the approximate velocity for the selected model. Higher velocities are obtained at lower adjustment settings and lower velocities are obtained at higher adjustment settings.

EXAMPLE: Double Acting Application

Stroke required: 51 mm
Control direction: Tension and Compression
Propelling force: 1 557 N (tension),
1 780 N (compression)

Selection: ADA 505

1. Velocity: 0,28 m/s (tension),
   0,15 m/s (compression)
   Intersection point: Adjustment setting 2 (tension),
   4 (compression)
2. Adjustment setting: 2 (tension), 4 (compression)
   Velocity: 0,28 m/s (tension),
   0,15 m/s (compression)

NOTE: When a free flow plug is used, the intersection point of the propelling force and free flow plug curve determines the velocity.

NOTE: Propelling force and velocity should be measured at the location of the rate control.

Adjustment Techniques

Useable Adjustment Setting Range

Green lines are model's maximum allowable propelling force.

Compression

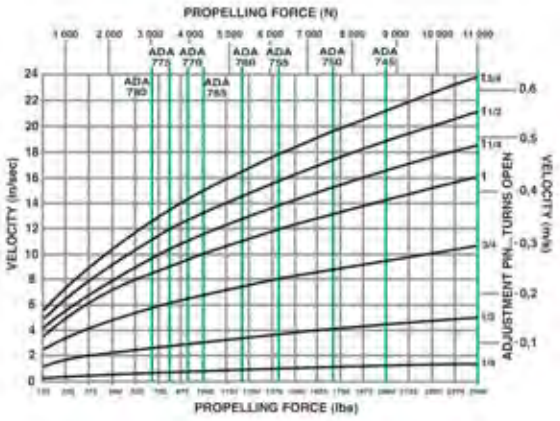

Tension

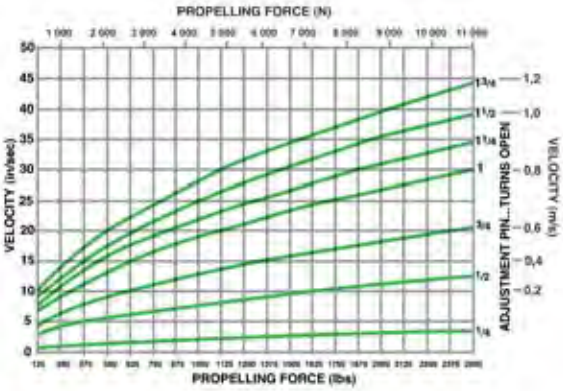

Free Flow

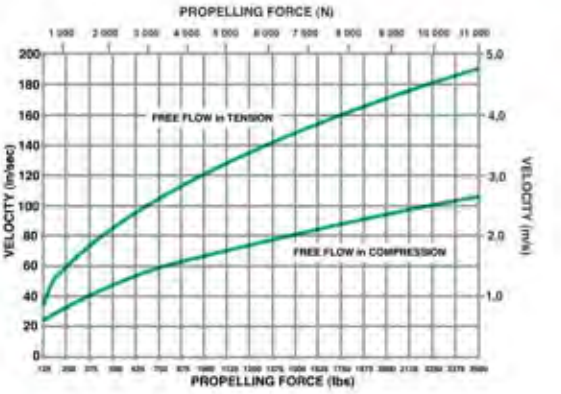

Damping Force

Turn adjustment pin 1 ¾ turns open to provide minimum damping force. Turn adjustment pin fully closed to provide maximum damping force.

1. To determine the approximate adjustment setting, when the selected model, propelling force, and velocity are known, compare velocity to the propelling force in the compression and/or tension mode adjustment setting curves. The intersection point of the velocity and the propelling force is the approximate adjustment setting to be used. Adjustment lower or higher than this setting will result in slower or faster damper operation respectively.

2. To determine the velocity, when the selected model, adjustment setting, and propelling force are known, compare the propelling force to the adjustment setting in the compression and/or tension mode adjustment setting curves. The intersection point of the propelling force and the adjustment setting is the approximate velocity for the selected model. Higher velocities are obtained at higher adjustment settings and lower velocities are obtained at lower adjustment settings.

3. A 1,5mm Hex Wrench (provided) is required to adjust the unit.

NOTE: When a free flow plug is used, the intersection point of the propelling force and free flow plug curve determines the velocity.

EXAMPLE: Adjustable Double Acting Rate Control Application

Stroke required:	152 mm
Control direction:	Tension and Compression
Propelling force:	4 448 N (tension), 7 228 N (compression)
Selection:	ADA 715
1. Velocity:	0,635 m/s (tension), 0,1 m/s (compression)
Intersection point:	Adjustment setting 1 ½ (tension), ½ (compression)
2. Adjustment setting:	1 ½ (tension), ½ (compression)
Velocity:	0,635 m/s (tension), 0,1 m/s (compression)

NOTE: Propelling force and velocity should be measured at the location of the rate control.

ITT
ENGINEERED FOR LIFE
www.enidine.eu Email: info@enidine.eu Tel.: +49 6063 9314 0 Fax: +49 6063 9314 44

Typical Applications

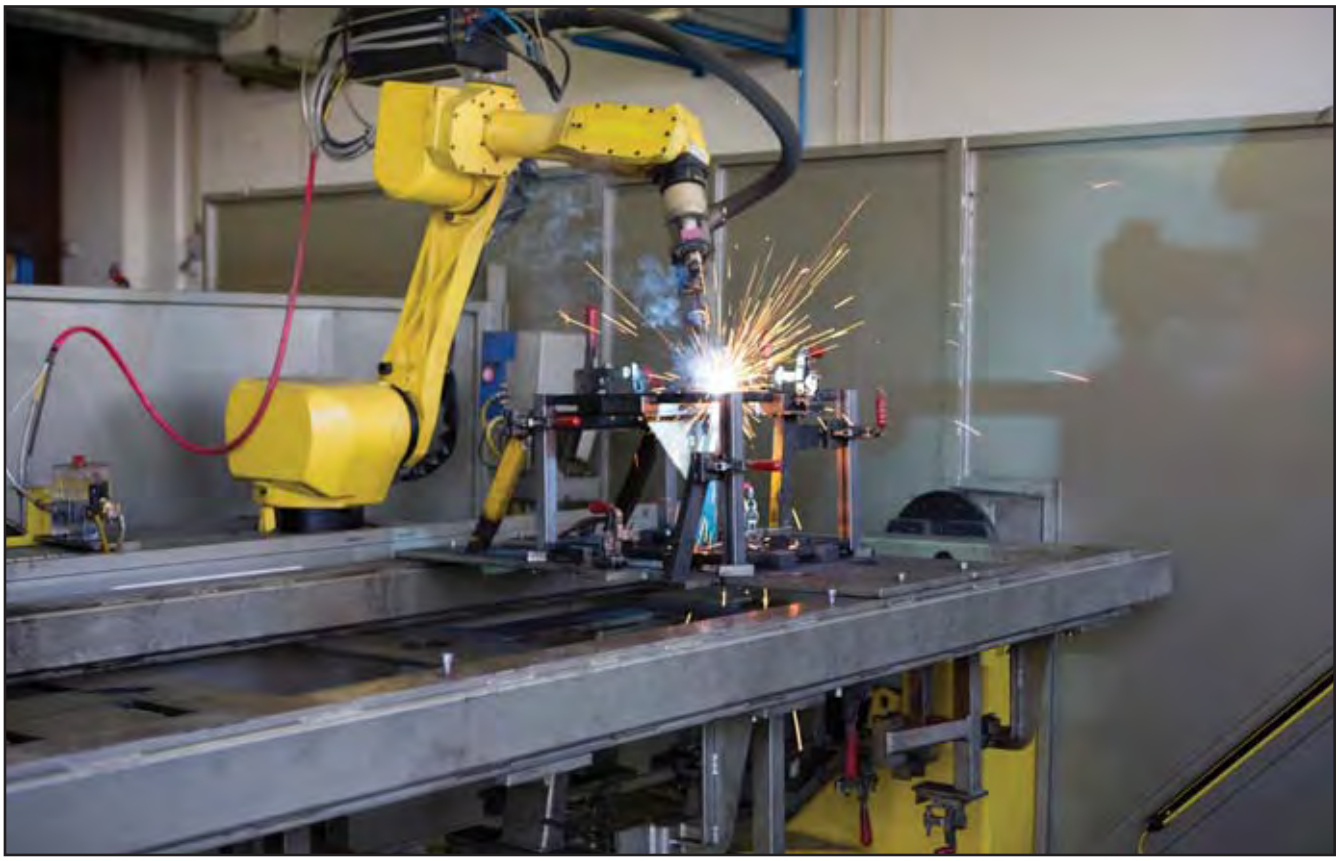

Assembly Applications

Energy Production

Printing Presses

ADA 505M → ADA 525M Series

Technical Data

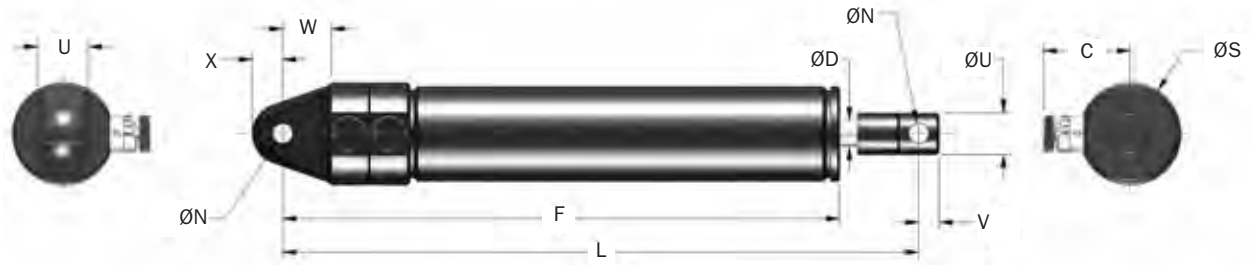

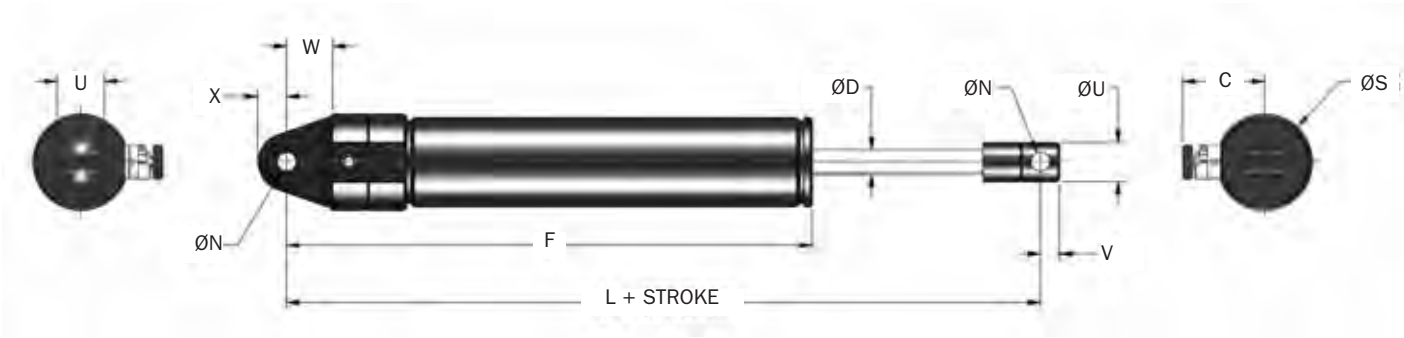

Catalog No./ Model	Damping Direction	Bore Size mm	(S) Stroke mm	F_D Max. Propelling Force Extension N	Compression N	E_TC Max. Nm/hr	Mass Kg
ADA 505M	T, C or T and C	16,0	50,0	2 000	2 000	73 450	0,3
ADA 510M	T, C or T and C	16,0	100,0	2 000	1 670	96 050	0,372
ADA 515M	T, C or T and C	16,0	150,0	2 000	1 335	118 650	0,445
ADA 520M	T, C or T and C	16,0	200,0	2 000	900	141 250	0,520
ADA 525M	T, C or T and C	16,0	250,0	2 000	550	163 850	0,590

Catalog No./ Model	C mm	D mm	F mm	L mm	N +0,13/-0,00 mm	S mm	U +0,00/-0,381 mm	V mm	W mm	X mm
ADA 505M	27,0	8,0	173,0	200	6,0	31,8	12,7	6,3	14,2	9,5
ADA 510M	27,0	8,0	224,0	250	6,0	31,8	12,7	6,3	14,2	9,5
ADA 515M	27,0	8,0	275,0	300	6,0	31,8	12,7	6,3	14,2	9,5
ADA 520M	27,0	8,0	325,0	350	6,0	31,8	12,7	6,3	14,2	9,5
ADA 525M	27,0	8,0	376,0	400	6,0	31,8	12,7	6,3	14,2	9,5

ITT ENGINEERED FOR LIFE
www.enidine.eu Email: info@enidine.eu Tel.: +49 6063 9314 0 Fax: +49 6063 9314 44

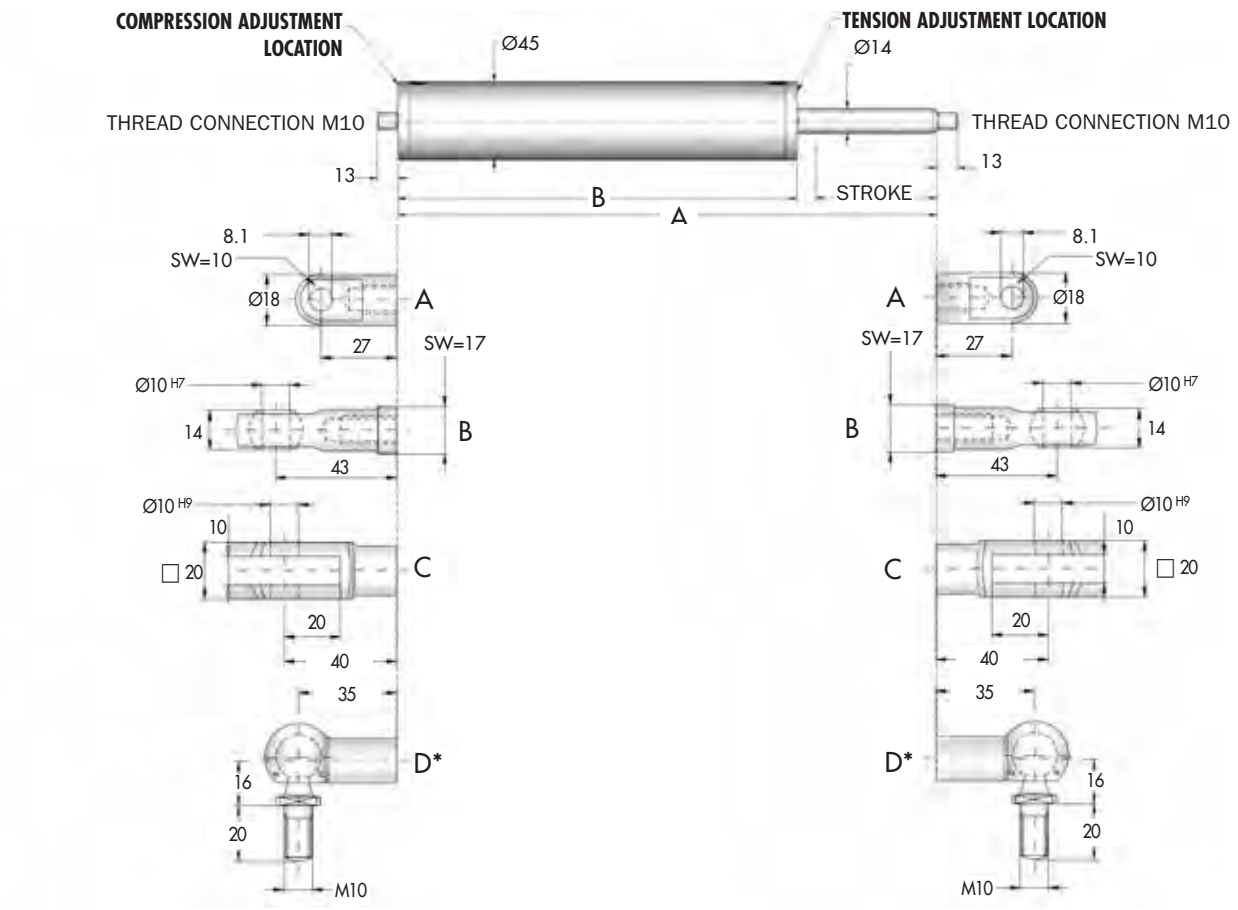

Catalog No./ Model	Damping Direction	Bore Size mm	(S) Stroke mm	FD Max. Propelling Force		E_TC Max Nm/hr	Model Mass Kg	A mm	B mm
				Tension N	Compression N				
ΔADA 705M	T, C or T and C	25	50,0	11 000	11 000	129 000	1,6	237	180
ΔADA 710M	T, C or T and C	25	100,0	11 000	11 000	168 000	2,0	339	231
ΔADA 715M	T, C or T and C	25	150,0	11 000	11 000	206 000	2,3	441	282
ΔADA 720M	T, C or T and C	25	200,0	11 000	11 000	247 000	2,6	541	332
ΔADA 725M	T, C or T and C	25	250,0	11 000	11 000	286 000	2,9	643	383
ΔADA 730M	T, C or T and C	25	300,0	11 000	11 000	326 000	3,2	745	434
ΔADA 735M	T, C or T and C	25	350,0	11 000	11 000	366 000	3,6	847	485

*Notes: 1. The maximum load capacity for mounting option D is 1 600 N.
2. Δ = Non-standard lead time items, contact ITT Enidine.

Rate Controls
ADA Series

ADA 740M → ADA 780M Series

Technical Data

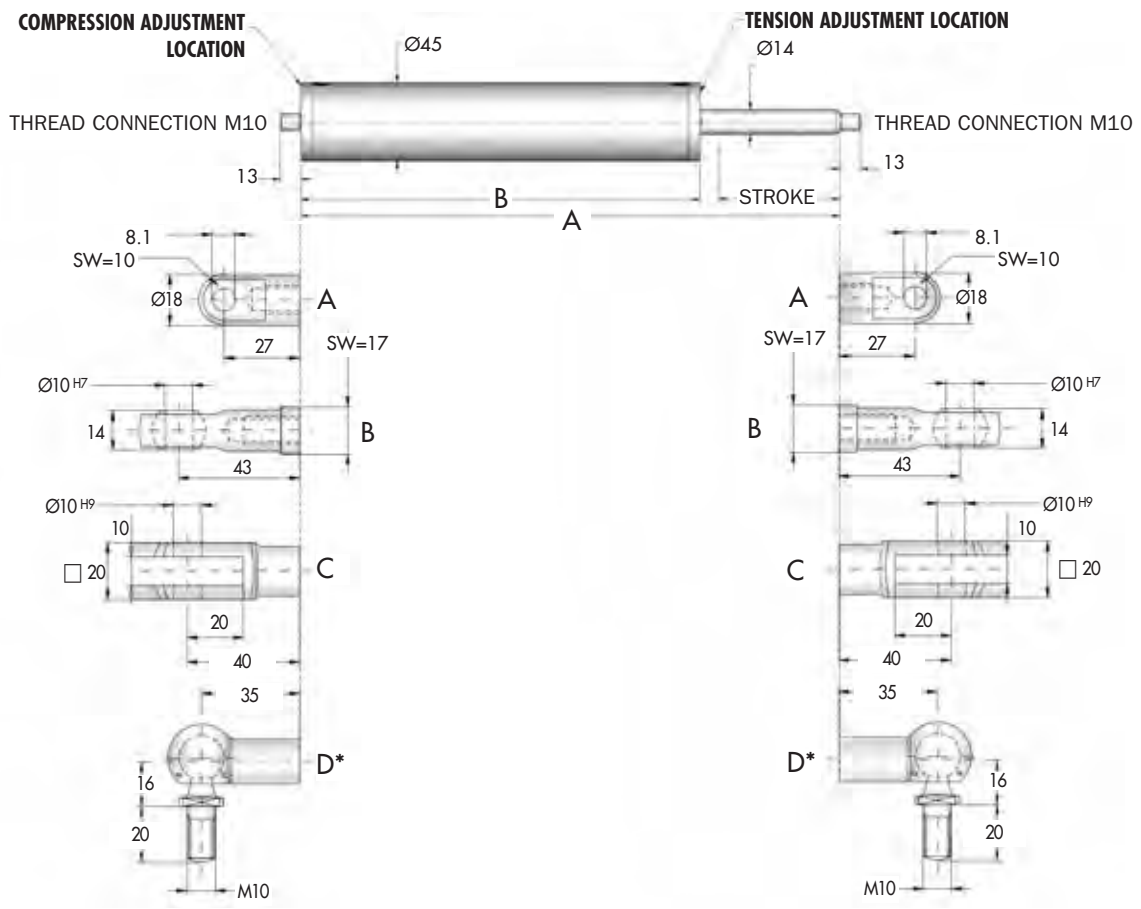

Catalog No./ Model	Damping Direction	Bore Size mm	(S) Stroke mm	FD Max. Propelling Force Tension N	FD Max. Propelling Force Compression N	E_TC Max Nm/hr	Mass Kg	A mm	B mm
Δ ADA 740M	T, C or T and C	25	400	11 000	11 000	405 000	3,9	947	535
Δ ADA 745M	T, C or T and C	25	450	11 000	8 800	444 000	4,2	1 049	586
Δ ADA 750M	T, C or T and C	25	500	11 000	7 500	484 000	4,5	1 151	637
Δ ADA 755M	T, C or T and C	25	550	11 000	6 200	524 000	4,8	1 253	688
Δ ADA 760M	T, C or T and C	25	600	11 000	5 300	563 000	5,2	1 355	739
Δ ADA 765M	T, C or T and C	25	650	11 000	4 500	603 000	5,5	1 457	790
Δ ADA 770M	T, C or T and C	25	700	11 000	4 000	642 000	5,8	1 557	840
Δ ADA 775M	T, C or T and C	25	750	11 000	3 500	681 000	6,1	1 659	891
Δ ADA 780M	T, C or T and C	25	800	11 000	3 100	721 000	6,5	1 761	942

*Notes: 1. The maximum load capacity for mounting option D is 1 600 N.
2. Δ = Non-standard lead time items, contact ITT Enidine.

ITT ENGINEERED FOR LIFE
www.enidine.eu Email: info@enidine.eu Tel.: +49 6063 9314 0 Fax: +49 6063 9314 44

Remote Adjustment Cable for ADA 500 Series

ITT Enidine will custom fit a remote adjustment cable for applications where the ADA unit will be mounted in non-accessible locations. Contact ITT Enidine for more information.

Note: If rotary application, please complete application worksheet on page 104 and forward to ITT Enidine.

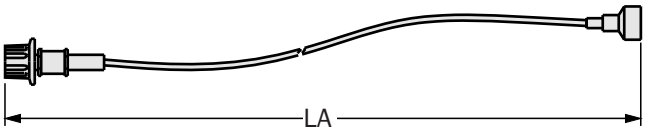

Standard remote adjustment cable length is 1220 mm. Optional lengths available upon request.
Note: Remote adjustment cable can be used in a single position only.

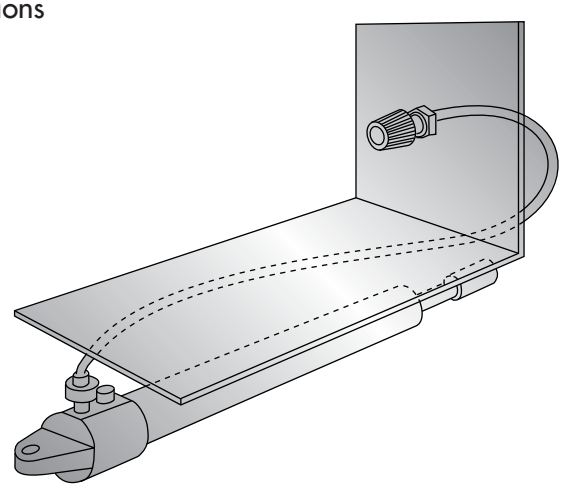

Adjustable Cartridge

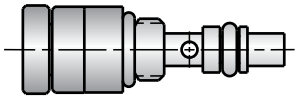

Free Flow Plug

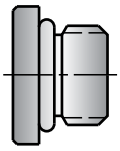

Non-Adjustable Cartridge

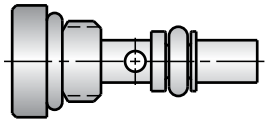

Catalog No.	Part Number	Accessory Description	LA mm	Mass g
RAC48	1K495748	Remote Adjustment Cable	1 220	191
			Notes	
RAC4957	AJ4957325	Adjustable Cartridge		
NAC "x"	NJ"x"4957327	Non-Adjustable Cartridge (0-6)	"x" specify desired setting "0-6". May be used in place of adjustable cartridge.	
CW4957	2L4957302	Cartridge Wrench	For installing adjustable and non-adjustable cartridges.	
FFP4957	PA4957326	Free Flow Plug	Provides least amount of damping force for ADA Models.	

Rate Controls
DA Series

DA 705 → DA 720 Series

DA 75M x 50 → DA 75M x 100 Series

Technical Data

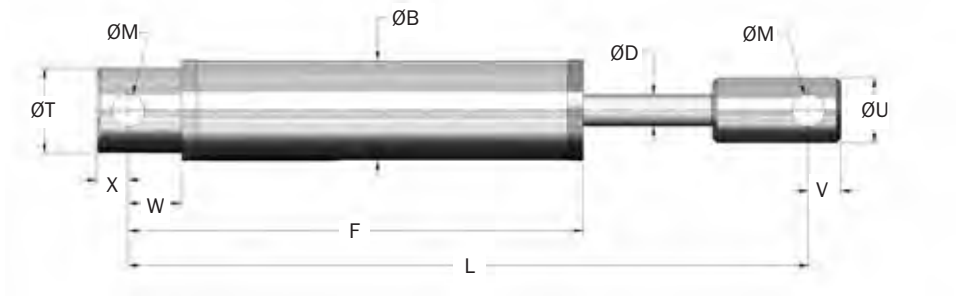

EXTENDED

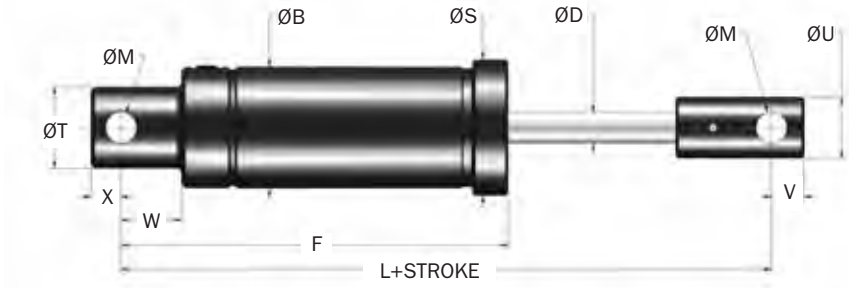

Catalog No./ Model	Damping Direction	Bore Size mm	(S) Stroke mm	F_D Max. Propelling N	E_TC Max. Nm/hr	Mass Kg
Δ DA 705	T, C or T and C	25,0	50,0	11 000	129 000	1,6
Δ DA 710	T, C or T and C	25,0	100,0	11 000	168 000	2,0
Δ DA 715	T, C or T and C	25,0	50,0	11 000	206 000	2,3
Δ DA 720	T, C or T and C	25,0	100,0	11 000	247 000	2,6
Δ DA 75M x 50	T, C or T and C	38,0	50,0	22 250	305 000	11,4
Δ DA 75M x 100	T, C or T and C	38,0	100,0	22 250	350 000	13,2

Note: Δ = Non-standard lead time items, contact ITT Enidine.

Catalog No./ Model	B mm	D mm	F mm	L mm	M ±0,38 mm	S mm	T ±0,38 mm	U ±0,25 mm	V mm	W mm	X mm
Δ DA 705	45,0	14,0	255,1	307,1	14,7	–	38,0	29,0	14,5	24,0	14,0
Δ DA 710	45,0	14,0	255,1	409,1	14,7	–	38,0	29,0	14,5	24,0	14,0
Δ DA 715	45,0	14,0	306,1	511,1	14,7	–	38,0	29,0	14,5	24,0	14,0
Δ DA 720	45,0	14,0	356,1	611,1	14,7	–	38,0	29,0	14,5	24,0	14,0
Δ DA 75M x 50	76,0	19,0	245	348	19,4	86,0	51,0	38,0	21,0	38,0	19,0
Δ DA 75M x 100	76,0	19,0	295	398	19,4	86,0	51,0	38,0	21,0	38,0	19,0

Notes: 1. DA Models will function at 10% of their maximum rated energy per cycle. If less than 10%, a smaller model should be specified.
2. Provide a positive stop 3 mm before end of stroke in tension and compression to prevent internal bottoming.
3. For optimal performance in vertical applications using compression, mount the rate control with the piston rod down.

ITT ENGINEERED FOR LIFE

www.enidine.eu Email: info@enidine.eu Tel.: +49 6063 9314 0 Fax: +49 6063 9314 44

DA 75M → TB 100M Series

Technical Data

COMPRESSED

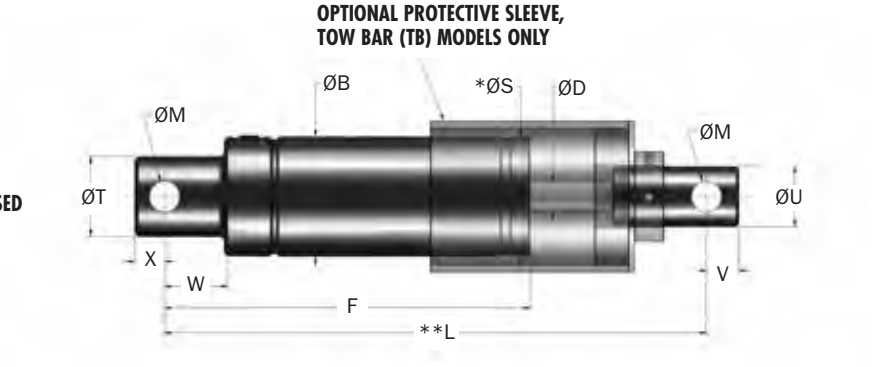

EXTENDED

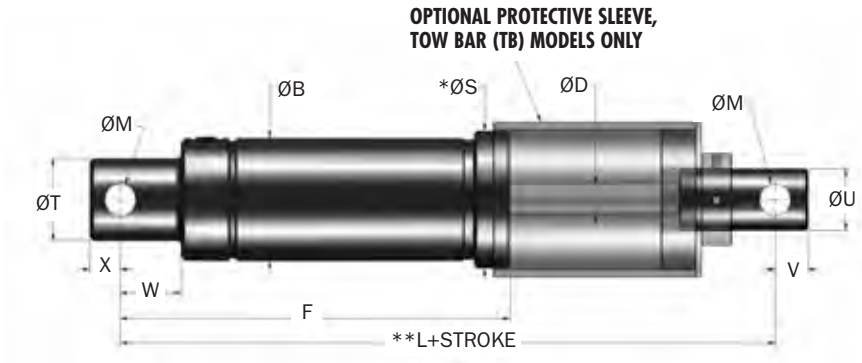

Catalog No./ Model	Damping Direction	Bore Size mm	(S) Stroke mm	F_D Max. Propelling N	E_T Max. Nm/c	E_TC Max. Nm/hr	Mass Kg
Δ DA 75M x 150	T, C or T and C	38,0	150,0	22 250	3 360	406 000	15,0
Δ DA 75M x 200	T, C or T and C	38,0	200,0	22 250	4 480	463 000	16,8
Δ DA 75M x 250	T, C or T and C	38,0	250,0	22 250	5 600	508 000	18,6
Δ TB 100M x 100	T and C	57,2	100,0	44 482	4 480	497 133	14,5
Δ TB 100M x 150	T and C	57,2	150,0	44 482	6 779	497 133	14,5

Note: Δ = Non-standard lead time items, contact ITT Enidine.

Catalog No./ Model	B mm	D mm	F mm	L mm	±0,38 mm	M S mm	±0,38 mm	T ±0,25 mm	U V mm	W mm	X mm
Δ DA 75M x 150	76,0	19,0	345	448	19,4	86,0	51,0	38,0	21,0	38,0	19,0
Δ DA 75M x 200	76,0	19,0	395	498	19,4	86,0	51,0	38,0	21,0	38,0	19,0
Δ DA 75M x 250	76,0	19,0	445	548	19,4	86,0	51,0	38,0	21,0	38,0	19,0
Δ TB 100M x 100	70,0	25,4	480	616	19,1	82,6	63,5	38,0	19,1	38,0	19,0
Δ TB 100M x 150	70,0	25,4	480	565	19,1	82,6	63,5	38,0	19,1	38,0	19,0

Notes: 1. DA Models will function at 10% of their maximum rated energy per cycle. If less than 10%, a smaller model should be specified.
2. Provide a positive stop 3 mm before end of stroke in tension and compression to prevent internal bottoming.
3. For optimal performance in vertical applications using compression, mount the rate control with the piston rod down.
4. * ØS indicates outside diameter of optional protective sleeve for TB 100M x 100 models.
5. ** Dimension L is controlled by a 50 mm stroke limiter.

U.S. Patents 5,549,285

Wire Rope Isolators

Standard **Wire Rope Isolators** are comprised of stainless steel stranded cable threaded through aluminum alloy retaining bars that are mounted for effective shock and vibration isolation. With their corrosion resistant, all-metal construction, ITT Enidine Wire Rope Isolators are environmentally stable, high-performance shock and vibration isolators that are unaffected by temperature extremes, chemicals, oils, ozone and abrasives.

Featuring a patented crimping pattern, versatile mounting options and a variety of sizes, these helical isolator products can help ensure that your systems can effectively meet performance requirements in Commercial, Industrial, and Defense industries, including MIL-STD-810, MIL-STD-167, MIL-S-901D, MIL-E-5400, STANAG-042, BV43-44 and DEF-STND 0755. For more information, please refer to our "Wire Rope Isolator Overview and Application Worksheet" on pages 107-108 to assist you in selecting a model for your application.

Overview

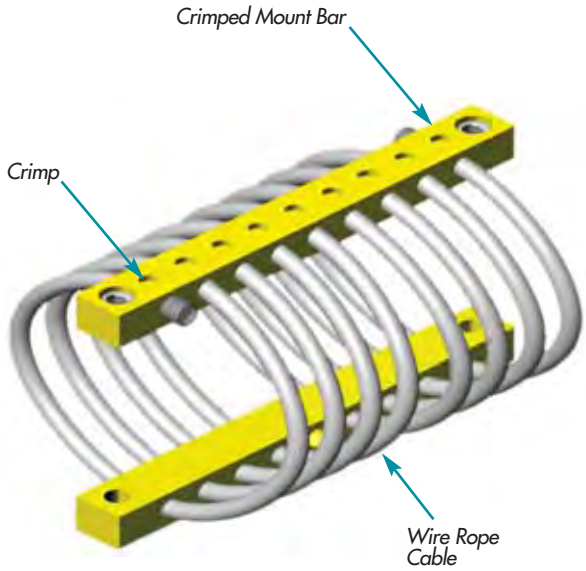

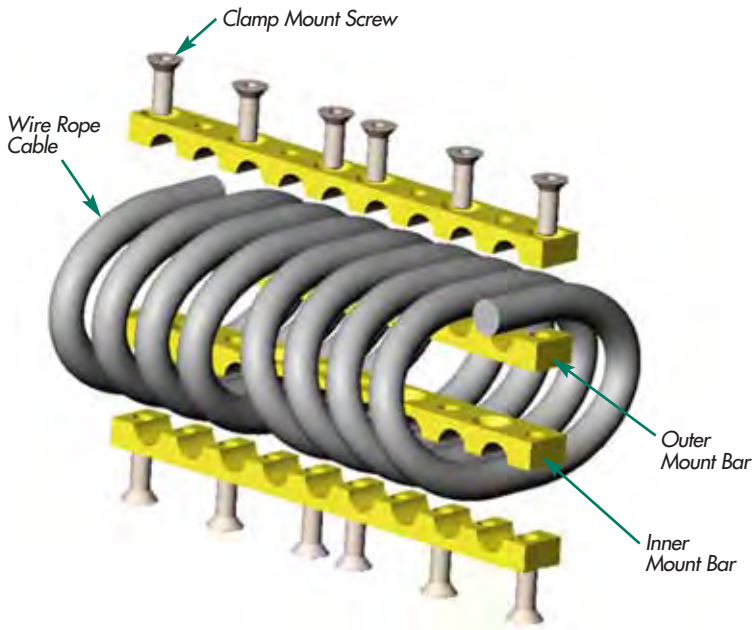

Crimp Models (WR2 – WR8):
ITT Enidine's patented crimp design lowers cost by using fewer mount bars when compared to the clamp design, no assembly hardware, and reduced assembly time.

Clamp Models (WR12 – WR40):
ITT Enidine's clamp bar models are constructed by clamping the wire rope between two fastened mount bars.

Typical Applications

Piping Systems

Cabinet Applications

Sensitive Electronics Isolation

Wire Rope Isolators
WR Series

Overview

Materials and Finishes:

Standard: Wire Rope: 302/304 Stainless Steel
Mount Bars: 6061-T6 Aluminum, Chemical Conversion Coated per MIL-C-5541, Class 1A (RoHS Compliant)
Hardware: Alloy Steel per ASTM F835, Zinc Plated (WR12–WR40 Series)
Thread: Stainless Self Clinching Insert (WR2–WR8 Series), Threaded bar (WR12–WR40 Series)

Optional: Wire Rope: Galvanized or Nylon Coated Stainless
Mount Bars: 6061-T6 Aluminum, Anodized per MIL-A-8625, Type II, Class 1 (RoHS Compliant)
302/304 Stainless Steel per ASTM A276, Passivated
Hardware: 302/304 Stainless Steel (when stainless steel bars are specified) (WR12 – WR40)
Threads: Stainless Steel Helical Inserts, Free Running or Self Locking (WR3 – WR40)
Threaded Aluminum (WR2 – WR8)

Special: Consult ITT Enidine

Isolator Options:

Mounting: ITT Enidine offers a full range of mounting combinations of thru-hole, countersunk, and threaded bars. All configurations are available in either Imperial or Metric styles. Add an "M" after the mounting option for Metric. Some models have reduced mounting options available due to limited fastener installation space. Consult ITT Enidine if a preferred mounting configuration is not listed.

Loops: ITT Enidine's wire rope isolators can be purchased with the full number of loops, or as few as 2-Loops. The number of loops is indicated in the isolator part number. Performance is provided for full loop isolators. Performance for reduced loop isolators can be obtained by a simple ratio.

Bellmouth: ITT Enidine's wire rope isolators are available with a "bellmouth" option. The bellmouth feature includes mount bars with radii manufactured into the wire rope hole edges. This option is recommended for high fatigue applications. Add an "R" to the end of the part number.

Performance:

Stiffness (Kv or Ks):
Wire rope isolators exhibit non-linear stiffness behavior. Small deflections, usually associated with vibration isolation, will have a different spring rate than larger shock deflections. ITT Enidine publishes typical vibration stiffness values (Kv), and average shock stiffness values (Ks) within the catalog. These values can be used with the provided equations listed on Page 108 to predict system performance. The stiffness values listed in the catalog are for full-loop versions. For reduced loop versions, ratio the stiffness by dividing the number of desired loops by the number of full loops.

Isolator Axes:
Wire rope isolators are multi-axis isolators. The diagram below includes load axis definitions and deflection considerations.

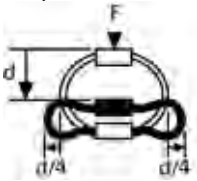

COMPRESSION

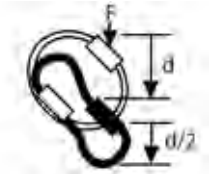

45º COMPRESSION/ROLL

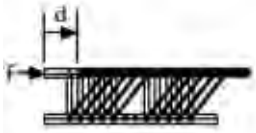

FIXED SHEAR
(for Wire Rope Isolators)

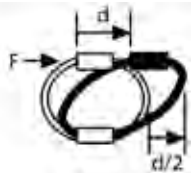

FIXED ROLL

Damping: Typically 5-15%, depending on size and input level. For specific damping considerations, please consult ITT Enidine.

Mounting Orientation:
The diagrams below illustrate typical mounting orientations.

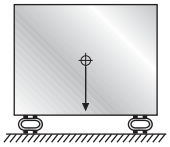
COMPRESSION

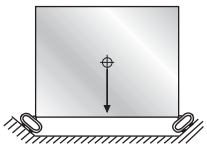
45º COMPRESSION/ROLL

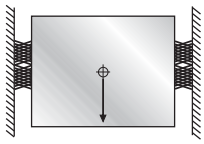
FIXED SHEAR
(for Wire Rope Isolators)

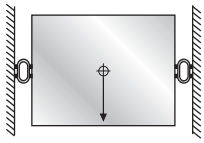
FIXED ROLL

Stabilizers:
Stabilizers are used to control deflections of tall supported masses. Stabilizers are typically recommended when the height equals 2-times the width or depth dimension. In most applications, the quantity of stabilizers required are half as many as the base isolators, and selected one size softer than the base isolators.

ITT ENGINEERED FOR LIFE
www.enidine.eu Email: info@enidine.eu Tel.: +49 6063 9314 0 Fax: +49 6063 9314 44

APPLICATION WORKSHEET - INPUTS METRIC

	METRIC
PART I: SYSTEM DATA:	
1. Total Supported Load (W_T): W_T = _____ Kg x 9,81 = _____ N	
2. Number of Isolators (n): n = _____	
3. Static Load per Isolator (W): $W = \frac{W_T}{n}$	W = _____ N*
* Assumes a central CG	
4. Load Axis: Compression Shear or Roll 45° Compression/Roll	Load Axis _____
PART II: VIBRATION SIZING:	
1. Input Excitation Frequency f_i = _____ Hz $\left(= \frac{rpm}{60}\right)$	
2. System Response Natural Frequency for 80% isolation: $f_n = \frac{f_i}{3,0}$ = _____Hz	
3. Maximum Isolator Vibration Stiffness: (K_v) $K_v = \frac{W(2\pi f_n)^2}{g}$ $g = 9,81\ m/s^2$	K_v = _____ N/m
4. Select an isolator by comparing calculated values with technical data for the desired load axis provided in tables for each isolator. a.) Calculated "W" must be less than the isolator's max static load and b.) Isolator's vibration stiffness must be less than the calculated maximum K_v	
PART III: SHOCK SIZING:	
1. Maximum Allowable Transmitted Acceleration: A_T = _____G's	
2. Shock Input Velocity: V = _____ m/s	
Free Fall Impact: $V = \sqrt{2gh}$ $g = 9,81\ m/s^2$ h = Drop Height (m)	
3. Min. Isolator Response Deflection: $D_{min} = \frac{V^2}{g(A_T)}$	D_{min} = _____m
4. Maximum Isolator Shock Stiffness: $K_s = \frac{W(V/D_{min})^2}{g}$	K_s = _____N/m
5. Select an isolator by comparing calculated values with technical data for the desired load axis provided in tables for each isolator. a.) Calculated "W" must be less than the isolator's max static load and b.) Calculated D_{min} must be less than the isolator's max deflection Note: Metric deflections are calculated in meters (m) and technical data is in millimeters (mm). and c.) Isolator's shock stiffness must be less than calculated maximum "K_s"	
6. Check actual deflection using "K_s" from technical data to ensure that the isolator's max deflection is not exceeded. $D_{actual} = \frac{V}{\sqrt{\frac{K_s(Isolator)g}{W}}}$	D_{actual} = _____m
7. If isolator's max deflection is exceeded, select another isolator and repeat steps 5 and 6.	

Wire Rope Isolators
WR2 Series

Technical Data

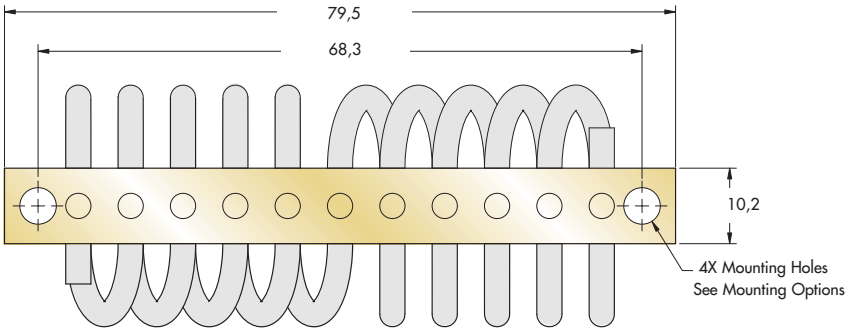

Note: Dimensions are in mm
Tolerances are ± .0,25mm

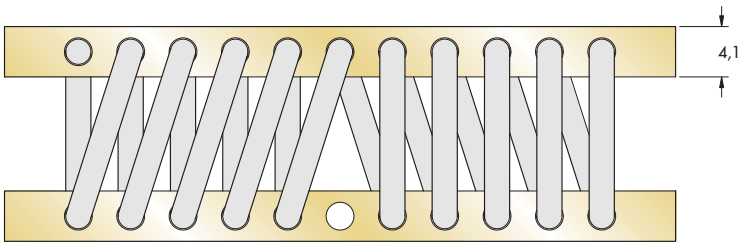

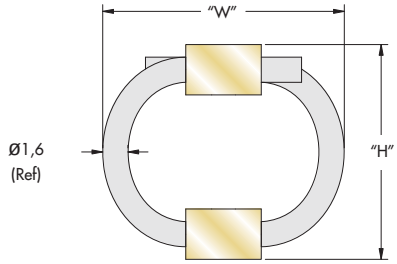

Size	Height "H" mm		Width Ref "W" mm	Unit Weight Kg	Mounting Options	Thru Hole mm	Thread mm	C'sink
WR2-100	18	± 1,52	25	0,02	B, D, E	Ø4,7 ± 0,13	M4 X 0,7	90°
WR2-200	20		28	0,02	A, B, C, D, E, S			
WR2-400	25		30	0,03				
WR2-600	28		33	0,03				
WR2-700	30		36	0,03				
WR2-800	33		38	0,03				

Model Number Ordering Code

WR2 - 400 - 10 D T M

- M — Add "M" for Metric — For C'sink and Threaded Options
- T — Threaded Hole Options: [ ] - Flush Self Clinching Threaded Insert; [T] - Tapped
- D — Mounting Options: See Chart
- 10 — Number of Loops: 10 (Reduced Number of Loops Available)
- 400 — Isolator Size: See Sizing Table

Mounting Options

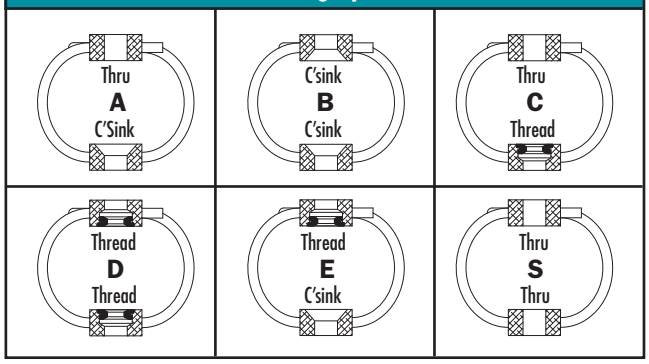

Wire Rope Special Options

Optional materials for the wire rope and mount bars are available upon request. Possibilities include galvanized rope, bell mouth mount bars or stainless steel rope and mount bars. Please contact ITT Enidine to discuss in more detail. Minimum purchase quantities may apply. See page 107.

- Maximum recommended torque for standard threaded insert is 0,7 Nm
- Operating Temperature Range: -100°C to 260°C
- U.S. Patent 5,549,285

ITT ENGINEERED FOR LIFE
www.enidine.eu Email: info@enidine.eu Tel.: +49 6063 9314 0 Fax: +49 6063 9314 44

Static
Load vs. Deflection

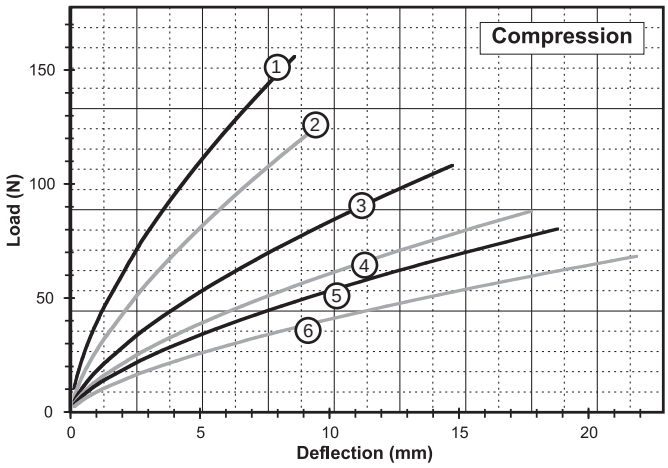

Compression

Curve	Model	Max Static Load N	Max Deflection mm	Kv (vibration) kN/m	Ks (shock) kN/m
1	WR2-100-10	47	8,6	36	22
2	WR2-200-10	36	9,7	25	16
3	WR2-400-10	31	14,7	17	8,8
4	WR2-600-10	27	17,8	12	6,1
5	WR2-700-10	22	18,8	11	5,3
6	WR2-800-10	20	21,8	7,9	3,9

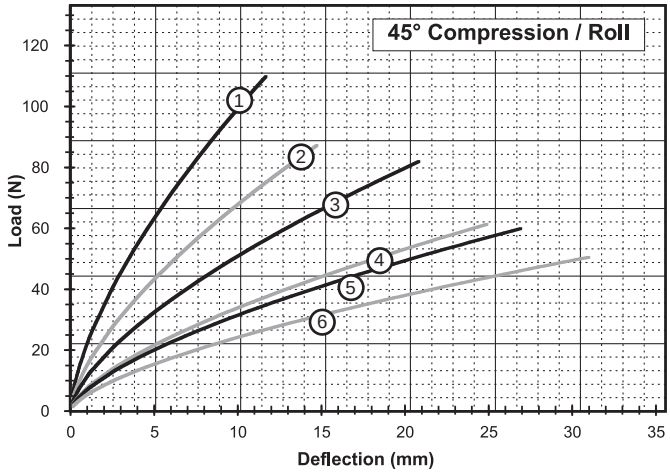

45° Compression/Roll

Curve	Model	Max Static Load N	Max Deflection mm	Kv (vibration) kN/m	Ks (shock) kN/m
1	WR2-100-10	33	11,7	20	11,4
2	WR2-200-10	24	14,7	14	7,0
3	WR2-400-10	24	20,8	11	4,7
4	WR2-600-10	18	24,9	7,0	3,0
5	WR2-700-10	18	26,9	6,1	2,6
6	WR2-800-10	16	31,0	5,3	1,9

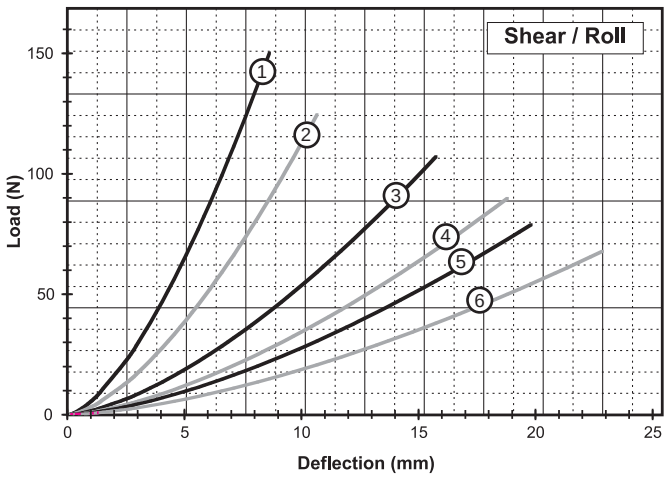

Shear/Roll

Curve	Model	Max Static Load N	Max Deflection mm	Kv (vibration) N/m	Ks (shock) kN/m
1	WR2-100-10	22	8,6	14	14
2	WR2-200-10	18	10,7	8,8	8,8
3	WR2-400-10	16	15,7	5,3	5,3
4	WR2-600-10	13	18,8	3,9	3,9
5	WR2-700-10	13	19,8	3,2	3,2
6	WR2-800-10	11	22,9	2,3	2,3

Notes: Performance provided for full loop models with standard (302/304) stainless steel cable.
Consult ITT Enidine for other options. Do not extrapolate curves.

Wire Rope Isolators
WR3 Series

Technical Data

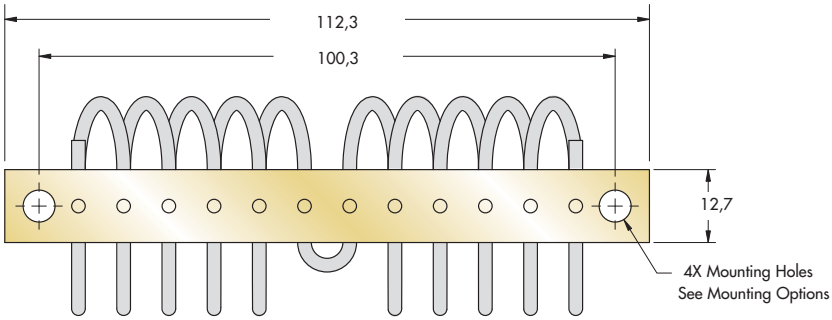

Note: Dimensions are in mm
Tolerances are ± 0,25mm

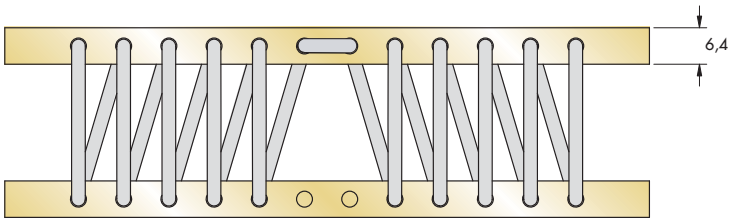

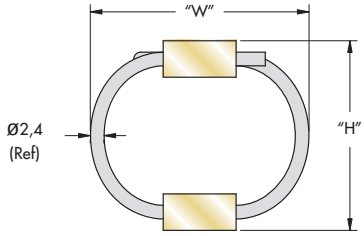

Size	Height "H" mm		Width Ref "W" mm	Unit Weight Kg	Mounting Options	Thru Hole mm	Thread mm	C'sink
WR3-100	23	± 1,52	28	0,06	B, D, E	Ø5,3 ± 0,13	M5 X 0,8	90°
WR3-200	25		30	0,07	A, B, C, D, E, S			
WR3-400	28		33	0,07				
WR3-600	33		38	0,07				
WR3-700	36		41	0,07				
WR3-800	38		43	0,08				

Model Number Ordering Code

WR3 - 400 - 10 D T M

- M — Add "M" for Metric — For C'sink and Threaded Options
- T — Threaded Hole Options: [ ] - Flush Self Clinching Threaded Insert; [T] - Tapped; [H] - Helical Insert, Free Running; [L] - Helical Insert, Self Locking
- D — Mounting Options: See Chart
- 10 — Number of Loops: 10 (Reduced Number of Loops Available)
- 400 — Isolator Size: See Sizing Table

Mounting Options

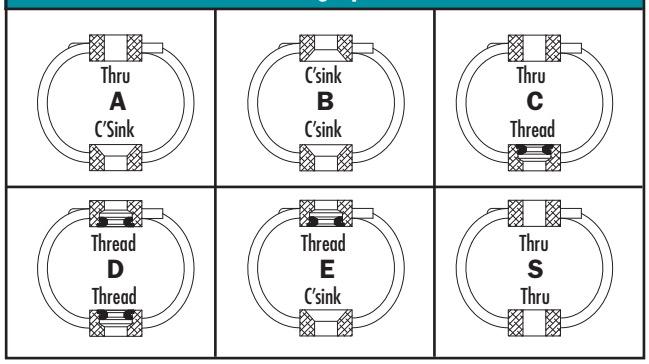

Wire Rope Special Options

Optional materials for the wire rope and mount bars are available upon request. Possibilities include galvanized rope, bell mouth mount bars or stainless steel rope and mount bars. Please contact ITT Enidine to discuss in more detail. Minimum purchase quantities may apply. See page 107.

- Maximum recommended torque for standard threaded insert is 0,9 Nm
- Operating Temperature Range: -100°C to 260°C
- U.S. Patent 5,549,285

ITT ENGINEERED FOR LIFE
www.enidine.eu Email: info@enidine.eu Tel.: +49 6063 9314 0 Fax: +49 6063 9314 44

Static
Load vs. Deflection

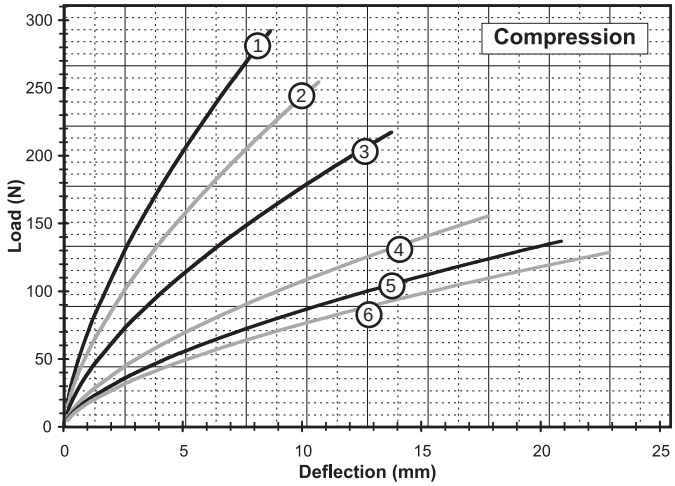

Compression

Curve	Model	Max Static Load N	Max Deflection mm	Kv (vibration) kN/m	Ks (shock) kN/m
1	WR3-100-10	85	8,6	65	40
2	WR3-200-10	76	10,7	51	30
3	WR3-400-10	62	13,7	37	19
4	WR3-600-10	44	17,8	23	11
5	WR3-700-10	40	20,8	18	7,9
6	WR3-800-10	40	22,9	16	7,0

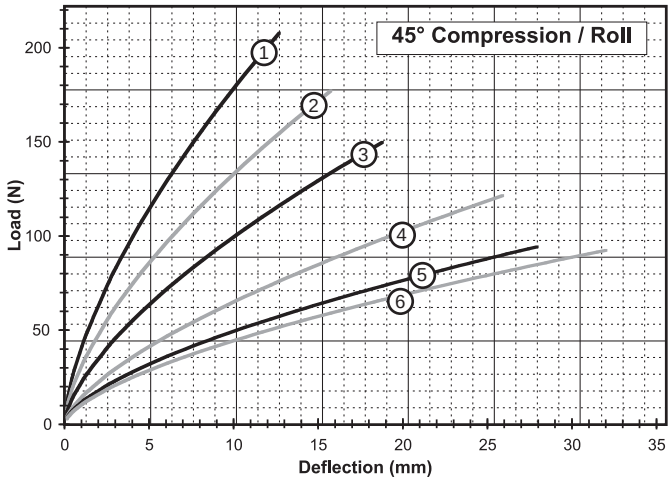

45° Compression/Roll

Curve	Model	Max Static Load N	Max Deflection mm	Kv (vibration) kN/m	Ks (shock) kN/m
1	WR3-100-10	62	12,7	38	20
2	WR3-200-10	53	15,7	28	14
3	WR3-400-10	44	18,8	21	9,6
4	WR3-600-10	36	25,9	13	5,6
5	WR3-700-10	31	27,9	11	4,4
6	WR3-800-10	27	32,0	9,6	3,5

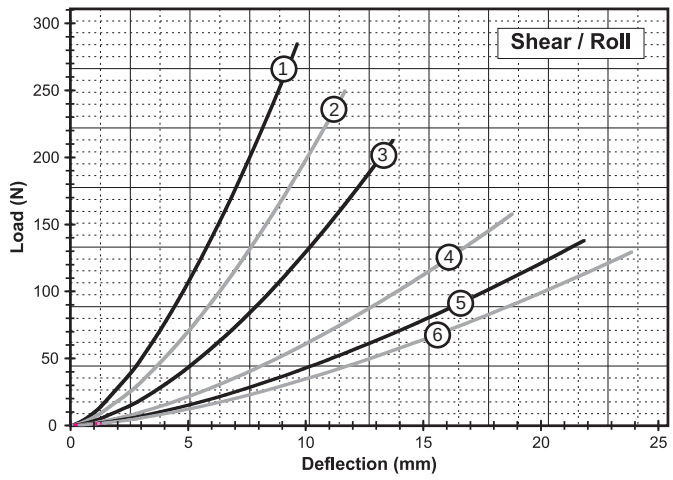

Shear/Roll

Curve	Model	Max Static Load N	Max Deflection mm	Kv (vibration) kN/m	Ks (shock) kN/m
1	WR3-100-10	44	9,7	24	24
2	WR3-200-10	40	11,7	18	18
3	WR3-400-10	31	13,7	12	12
4	WR3-600-10	27	18,8	7,0	7,0
5	WR3-700-10	22	21,8	5,3	5,3
6	WR3-800-10	18	23,9	4,4	4,4

Notes: Performance provided for full loop models with standard (302/304) stainless steel cable.
Consult ITT Enidine for other options. Do not extrapolate curves.

Wire Rope Isolators
WR4 Series

Technical Data

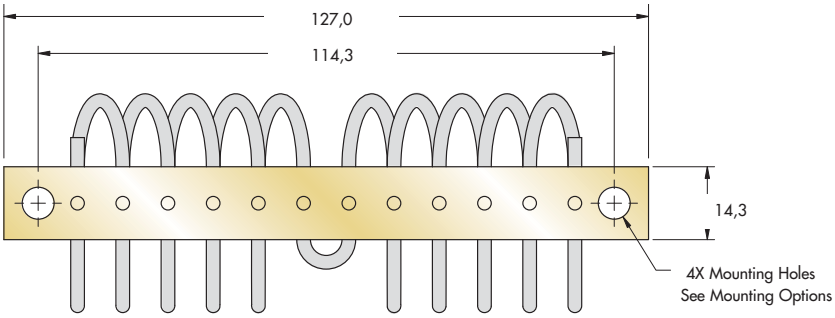

Note: Dimensions are in mm
Tolerances are ± 0,25mm

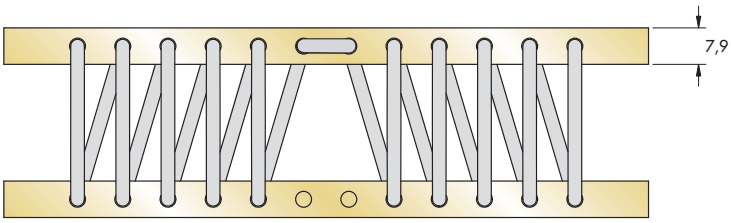

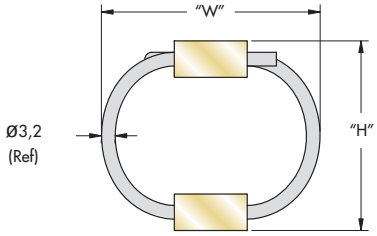

Size	Height "H" mm		Width Ref "W" mm	Unit Weight Kg	Mounting Options	Thru Hole mm	Thread mm	C'sink
WR4-100	28	± 1,52	36	0,12	B, D, E	Ø6,9 ± 0,13	M6 X 1,0	90°
WR4-200	30		38	0,12				
WR4-400	33		41	0,13	A, B, C, D, E, S			
WR4-500	36		43	0,13				
WR4-600	38		46	0,13				
WR4-700	41		48	0,14				
WR4-800	43		51	0,14				

Model Number Ordering Code

WR4 - 400 - 10 D T M

- M — Add "M" for Metric — For C'sink and Threaded Options
- T — Threaded Hole Options: [ ] - Flush Self Clinching Threaded Insert; [T] - Tapped; [H] - Helical Insert, Free Running; [L] - Helical Insert, Self Locking
- D — Mounting Options: See Chart
- 10 — Number of Loops: 10 (Reduced Number of Loops Available)
- 400 — Isolator Size: See Sizing Table

Mounting Options

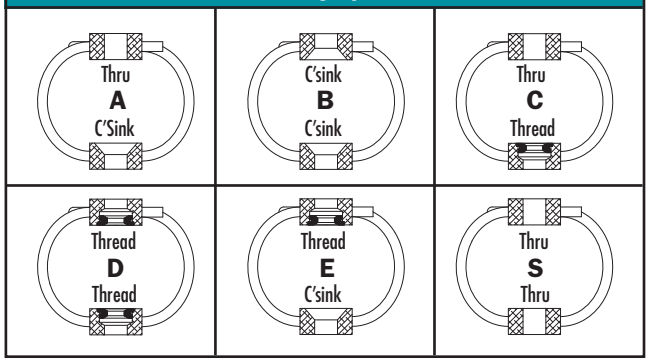

Wire Rope Special Options

Optional materials for the wire rope and mount bars are available upon request. Possibilities include galvanized rope, bell mouth mount bars or stainless steel rope and mount bars. Please contact ITT Enidine to discuss in more detail. Minimum purchase quantities may apply. See page 107.

- Maximum recommended torque for standard threaded insert is 3,7 Nm
- Operating Temperature Range: -100°C to 260°C
- U.S. Patent 5,549,285

ITT ENGINEERED FOR LIFE
www.enidine.eu Email: info@enidine.eu Tel.: +49 6063 9314 0 Fax: +49 6063 9314 44

Static
Load vs. Deflection

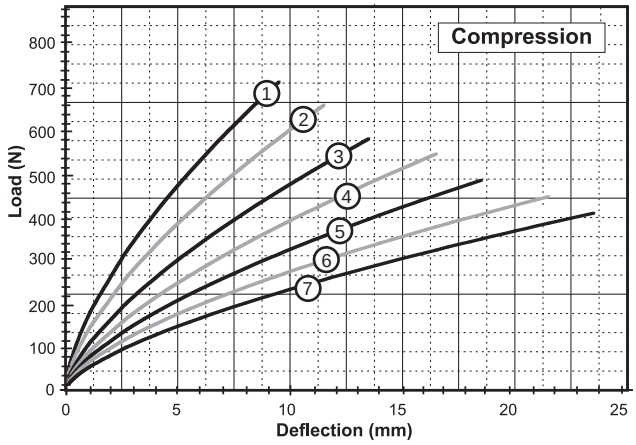

Compression

Curve	Model	Max Static Load N	Max Deflection mm	Kv (vibration) kN/m	Ks (shock) kN/m
1	WR4-100-10	213	9,7	154	91
2	WR4-200-10	194	11,7	124	68
3	WR4-400-10	166	13,7	95	51
4	WR4-500-10	156	16,8	78	39
5	WR4-600-10	142	18,8	67	32
6	WR4-700-10	133	21,8	57	25
7	WR4-800-10	117	23,9	46	21

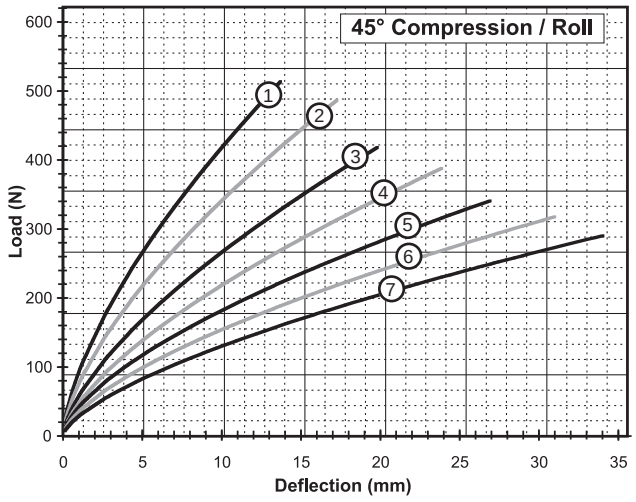

45° Compression/Roll

Curve	Model	Max Static Load N	Max Deflection mm	Kv (vibration) kN/m	Ks (shock) kN/m
1	WR4-100-10	149	13,7	86	46
2	WR4-200-10	138	17,3	70	35
3	WR4-400-10	118	19,8	53	25
4	WR4-500-10	111	23,9	44	20
5	WR4-600-10	102	26,9	39	16
6	WR4-700-10	94	31,0	32	12
7	WR4-800-10	84	34,0	26	11

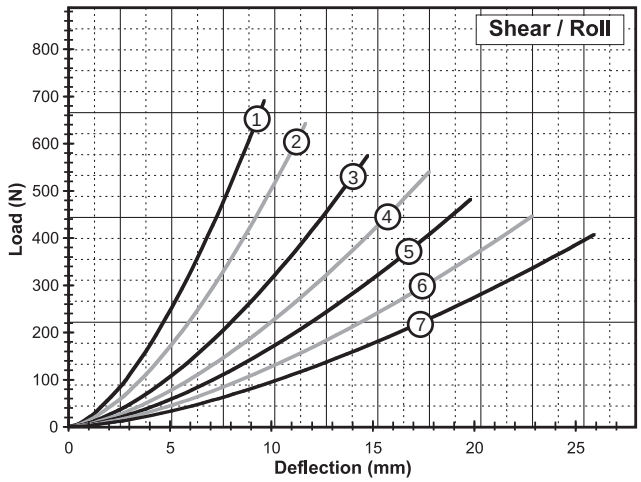

Shear/Roll

Curve	Model	Max Static Load N	Max Deflection mm	Kv (vibration) kN/m	Ks (shock) kN/m
1	WR4-100-10	111	9,7	56	56
2	WR4-200-10	98	11,7	43	43
3	WR4-400-10	93	14,7	31	31
4	WR4-500-10	85	17,8	25	25
5	WR4-600-10	80	19,8	19	19
6	WR4-700-10	71	22,9	16	16
7	WR4-800-10	62	25,9	12	12

Notes: Performance provided for full loop models with standard (302/304) stainless steel cable.
Consult ITT Enidine for other options. Do not extrapolate curves.

Wire Rope Isolators
WR5 Series

Technical Data

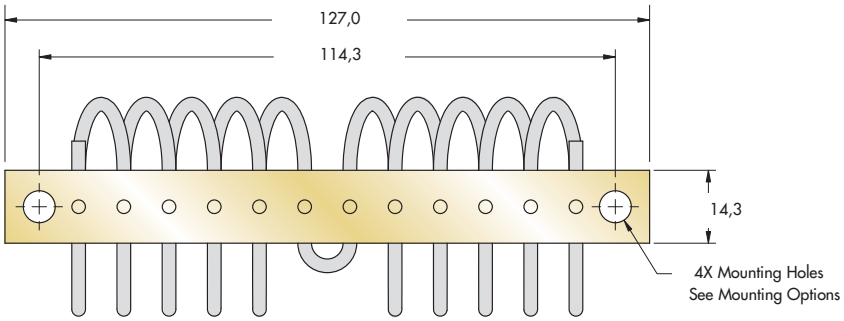

Note: Dimensions are in mm
Tolerances are ± 0,25mm

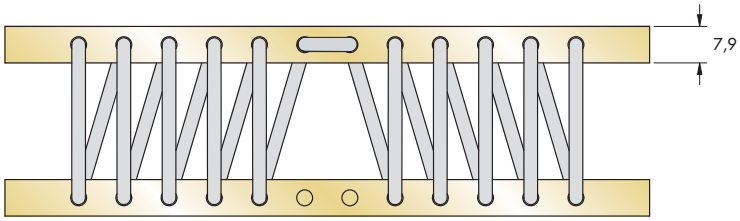

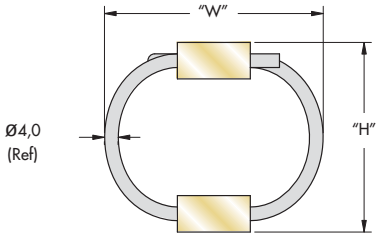

Size	Height "H" mm		Width Ref "W" mm	Unit Weight. Kg	Mounting Options	Thru Hole mm	Thread mm	C'sink
WR5-200	30	± 1,52	41	0,15	B, D, E	Ø6,9 ± 0,13	M6 X 1,0	90°
WR5-400	33		43	0,15	A, B, C, D, E, S			
WR5-600	38		48	0,16				
WR5-800	46	± 3,30	53	0,17				
WR5-900	53		64	0,18				

Model Number Ordering Code

WR5 - 400 - 10 D T M

- M — Add "M" for Metric — For C'sink and Threaded Options
- T — Threaded Hole Options: [ ] - Flush Self Clinching Threaded Insert; [T] - Tapped; [H] - Helical Insert, Free Running; [L] - Helical Insert, Self Locking
- D — Mounting Options: See Chart
- 10 — Number of Loops: 10 (Reduced Number of Loops Available)
- 400 — Isolator Size: See Sizing Table

Mounting Options

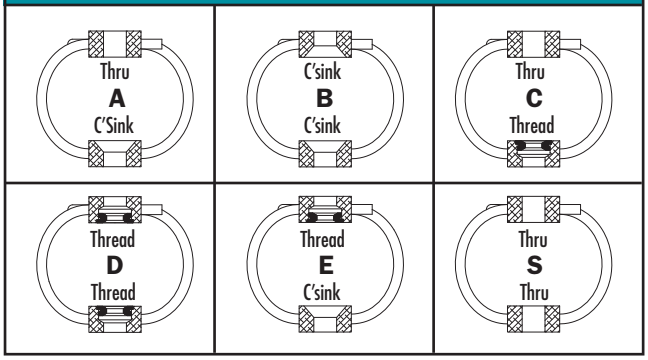

Wire Rope Special Options

Optional materials for the wire rope and mount bars are available upon request. Possibilities include galvanized rope, bell mouth mount bars or stainless steel rope and mount bars. Please contact ITT Enidine to discuss in more detail. Minimum purchase quantities may apply. See page 107.

- Maximum recommended torque for standard threaded insert is 4,3 Nm
- Operating Temperature Range: -100°C to 260°C
- U.S. Patent 5,549,285

ITT ENGINEERED FOR LIFE
www.enidine.eu Email: info@enidine.eu Tel.: +49 6063 9314 0 Fax: +49 6063 9314 44

Static
Load vs. Deflection

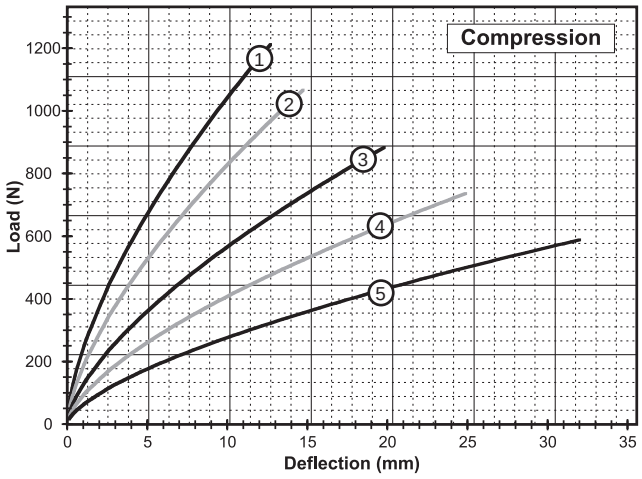

Compression

Curve	Model	Max Static Load N	Max Deflection mm	Kv (vibration) kN/m	Ks (shock) kN/m
1	WR5-200-10	364	12,7	222	117
2	WR5-400-10	309	14,7	170	88
3	WR5-600-10	257	19,8	116	54
4	WR5-800-10	216	24,9	84	37
5	WR5-900-10	172	32,0	58	23

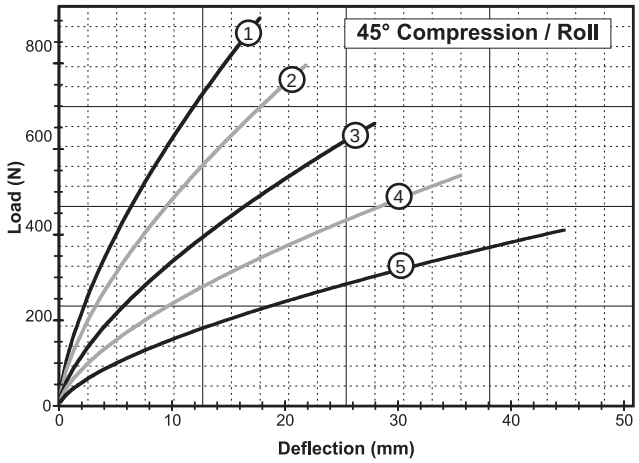

45° Compression/Roll

Curve	Model	Max Static Load N	Max Deflection mm	Kv (vibration) kN/m	Ks (shock) kN/m
1	WR5-200-10	254	17,8	123	60
2	WR5-400-10	218	21,8	96	42
3	WR5-600-10	182	27,9	66	28
4	WR5-800-10	151	35,6	48	18
5	WR5-900-10	115	44,7	31	11

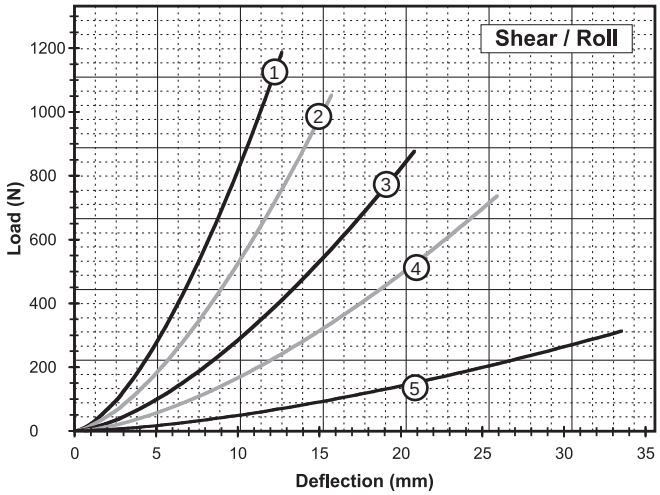

Shear/Roll

Curve	Model	Max Static Load N	Max Deflection mm	Kv (vibration) kN/m	Ks (shock) kN/m
1	WR5-200-10	178	12,7	73	73
2	WR5-400-10	156	15,7	53	53
3	WR5-600-10	133	20,8	33	33
4	WR5-800-10	111	25,9	23	23
5	WR5-900-10	40	33,5	7,9	7,9

Notes: Performance provided for full loop models with standard (302/304) stainless steel cable.
Consult ITT Enidine for other options. Do not extrapolate curves.

Wire Rope Isolators
WR6 Series

Technical Data

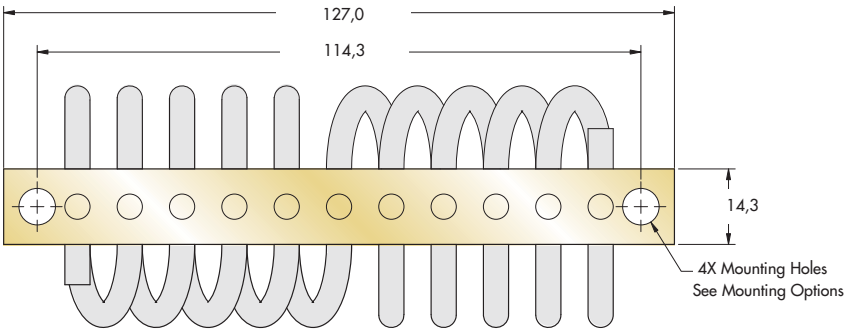

Note: Dimensions are in mm
Tolerances are ± 0,25mm

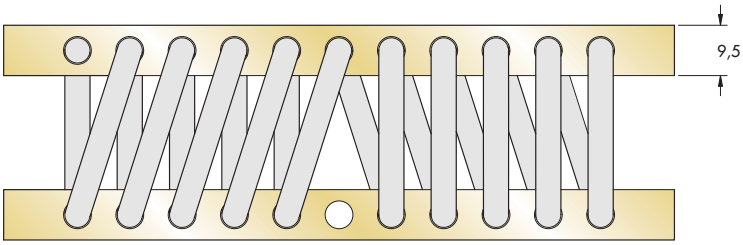

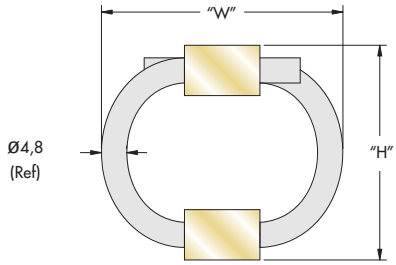

Size	Height "H" mm		Width Ref "W" mm	Unit Weight Kg	Mounting Options	Thru Hole mm	Thread mm	C'sink
WR6-200	30	± 1,52	36	0,19	D	Ø6,9 ± 0,13	M6 X 1,0	90°
WR6-300	33		38	0,20				
WR6-400	36		41	0,21	B, D, E			
WR6-500	38		43	0,21	A, B, C, D, E, S			
WR6-600	41		46	0,22				
WR6-700	43		48	0,25				
WR6-800	51		58	0,26				
WR6-850	54	± 3,30	75	0,27				
WR6-900	62		88	0,28				
WR6-950	81		107	0,29				

Model Number Ordering Code

WR6 - 400 - 10 D T M

- M — Add "M" for Metric — For C'sink and Threaded Options
- T — Threaded Hole Options: [ ] - Flush Self Clinching Threaded Insert; [T] - Tapped; [H] - Helical Insert, Free Running; [L] - Helical Insert, Self Locking
- D — Mounting Options: See Chart
- 10 — Number of Loops: 10 (Reduced Number of Loops Available)
- 400 — Isolator Size: See Sizing Table

Mounting Options

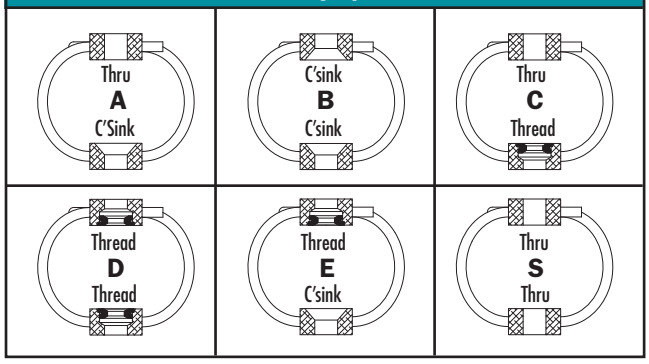

Wire Rope Special Options

Optional materials for the wire rope and mount bars are available upon request. Possibilities include galvanized rope, bell mouth mount bars or stainless steel rope and mount bars. Please contact ITT Enidine to discuss in more detail. Minimum purchase quantities may apply. See page 107.

- Maximum recommended torque for standard threaded insert is 4,3 Nm
- Operating Temperature Range: -100°C to 260°C
- U.S. Patent 5,549,285

ITT ENGINEERED FOR LIFE
www.enidine.eu Email: info@enidine.eu Tel.: +49 6063 9314 0 Fax: +49 6063 9314 44

Static
Load vs. Deflection

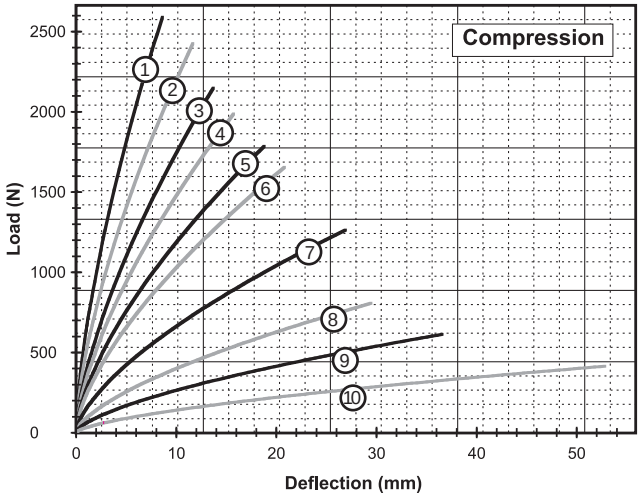

Compression

Curve	Model	Max Static Load N	Max Deflection mm	Kv (vibration) kN/m	Ks (shock) kN/m
1	WR6-200-10	734	8,6	578	363
2	WR6-300-10	712	11,7	455	252
3	WR6-400-10	601	13,7	347	189
4	WR6-500-10	578	15,7	301	152
5	WR6-600-10	512	18,8	244	117
6	WR6-700-10	489	20,8	212	96
7	WR6-800-10	365	26,9	136	58
8	WR6-850-10	236	29,5	82	33
9	WR6-900-10	178	36,6	54	21
10	WR6-950-10	120	52,8	29	10

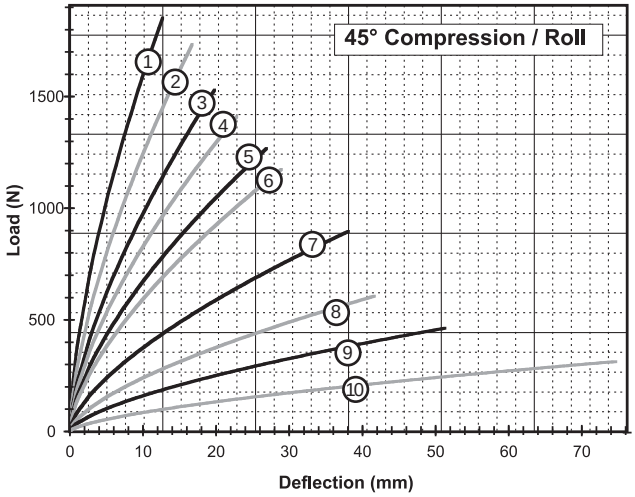

45° Compression/Roll

Curve	Model	Max Static Load N	Max Deflection mm	Kv (vibration) kN/m	Ks (shock) kN/m
1	WR6-200-10	534	12,7	341	179
2	WR6-300-10	512	16,8	258	126
3	WR6-400-10	432	19,8	197	93
4	WR6-500-10	409	22,9	172	75
5	WR6-600-10	373	26,9	141	58
6	WR6-700-10	350	29,0	123	49
7	WR6-800-10	260	38,1	77	28
8	WR6-850-10	177	41,7	49	18
9	WR6-900-10	136	51,3	33	11
10	WR6-950-10	91	74,7	18	5,3

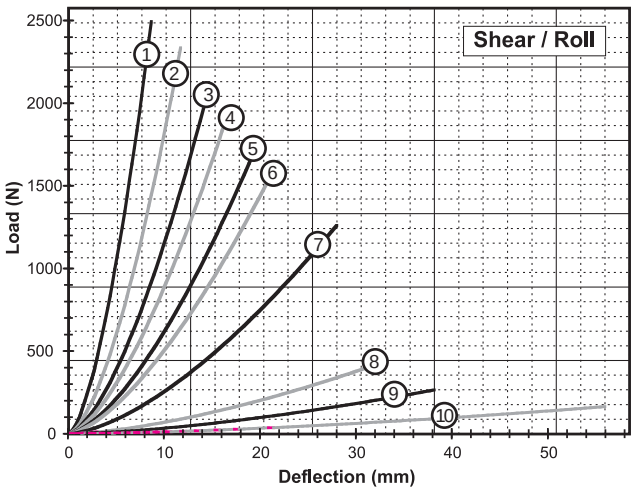

Shear/Roll

Curve	Model	Max Static Load N	Max Deflection mm	Kv (vibration) kN/m	Ks (shock) kN/m
1	WR6-200-10	356	8,6	224	224
2	WR6-300-10	356	11,7	156	156
3	WR6-400-10	334	14,7	112	112
4	WR6-500-10	311	16,8	93	93
5	WR6-600-10	289	19,8	70	70
6	WR6-700-10	267	21,8	60	60
7	WR6-800-10	200	27,9	35	35
8	WR6-850-10	58	31,0	11	11
9	WR6-900-10	40	38,1	5,3	5,3
10	WR6-950-10	22	55,9	2,3	2,3

Notes: Performance provided for full loop models with standard (302/304) stainless steel cable.
Consult ITT Enidine for other options. Do not extrapolate curves.

Wire Rope Isolators
WR8 Series

Technical Data

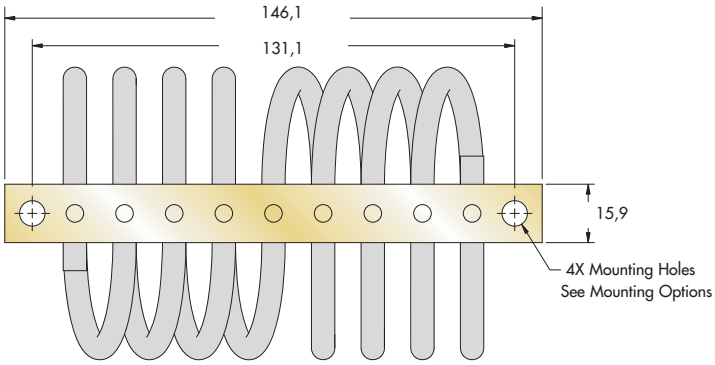

Note: Dimensions are in mm
Tolerances are ± 0,25mm

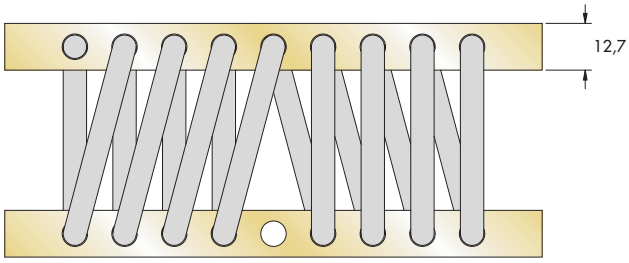

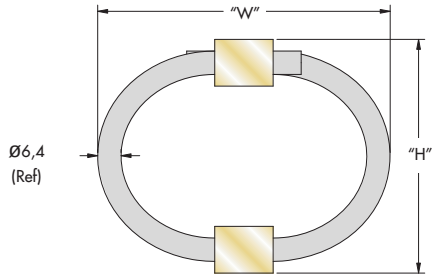

Size	Height "H" mm		Width Ref "W" mm	Unit Weight Kg	Mounting Options	Thru Hole mm	Thread mm	C'sink
WR8-200	48	± 2,54	56	0,38	A, B, C, D, E, S	Ø6,9 ± 0,13	M6 X 1,0	90°
WR8-400	54		64	0,41				
WR8-500	59		71	0,43				
WR8-600	64		80	0,47				
WR8-700	64		89	0,52				
WR8-800	67	± 3,81	95	0,54				
WR8-850	67		100	0,57				
WR8-900	83		108	0,59				

Model Number Ordering Code

WR8 - 400 - 8 D T M

- M — Add "M" for Metric — For C'sink and Threaded Options
- T — Threaded Hole Options: [ ] - Flush Self Clinching Threaded Insert; [T] - Tapped; [H] - Helical Insert, Free Running; [L] - Helical Insert, Self Locking
- D — Mounting Options: See Chart
- 8 — Number of Loops: 08 (Reduced Number of Loops Available)
- 400 — Isolator Size: See Sizing Table

Mounting Options

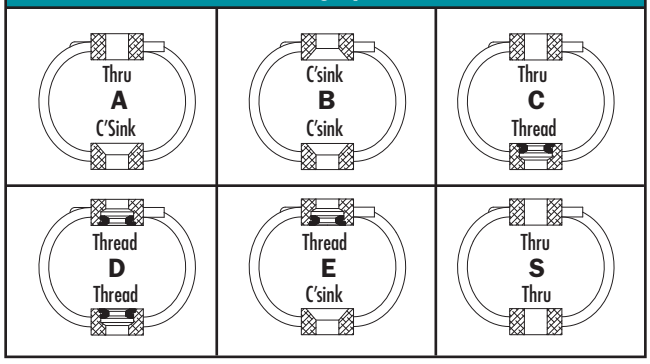

Wire Rope Special Options

Optional materials for the wire rope and mount bars are available upon request. Possibilities include galvanized rope, bell mouth mount bars or stainless steel rope and mount bars. Please contact ITT Enidine to discuss in more detail. Minimum purchase quantities may apply. See page 107.

- Maximum recommended torque for standard threaded insert is 4,3 Nm
- Operating Temperature Range: -100°C to 260°C
- U.S. Patent 5,549,285

ITT ENGINEERED FOR LIFE
www.enidine.eu Email: info@enidine.eu Tel.: +49 6063 9314 0 Fax: +49 6063 9314 44

Static
Load vs. Deflection

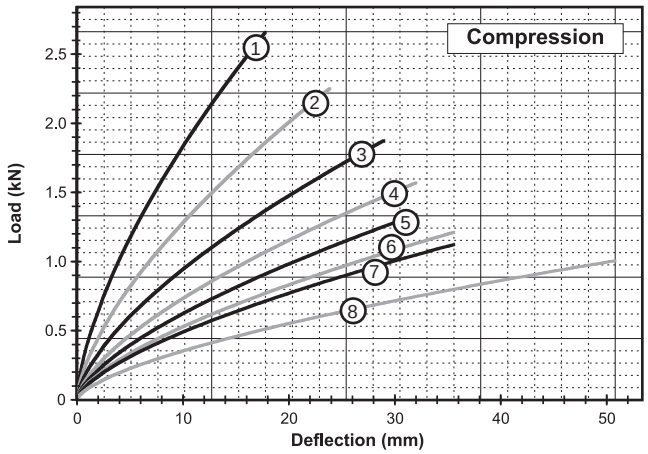

Compression

Curve	Model	Max Static Load N	Max Deflection mm	Kv (vibration) kN/m	Ks (shock) kN/m
1	WR8-200-08	778	17,8	382	182
2	WR8-400-08	667	23,9	266	116
3	WR8-500-08	556	29,0	196	79
4	WR8-600-08	445	32,0	151	60
5	WR8-700-08	386	32,0	127	51
6	WR8-800-08	351	35.6	109	42
7	WR8-850-08	325	35.6	100	39
8	WR8-900-08	297	50,8	74	25

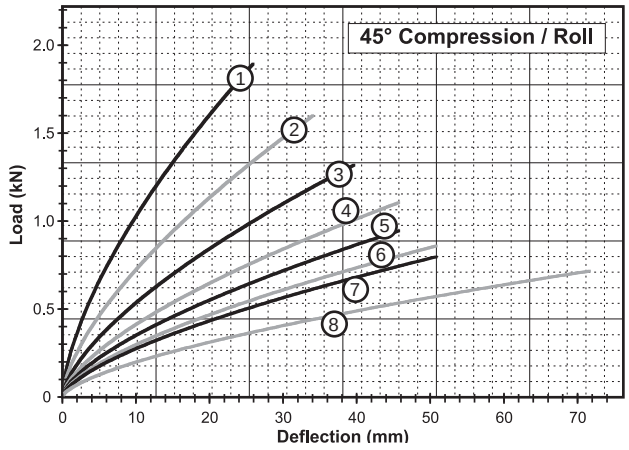

45° Compression/Roll

Curve	Model	Max Static Load N	Max Deflection mm	Kv (vibration) kN/m	Ks (shock) kN/m
1	WR8-200-08	556	25,9	215	89
2	WR8-400-08	467	34,0	151	58
3	WR8-500-08	390	39,6	109	40
4	WR8-600-08	321	45,7	86	30
5	WR8-700-08	273	45,7	72	25
6	WR8-800-08	248	50,8	61	21
7	WR8-850-08	229	50,8	56	19
8	WR8-900-08	209	71,6	41	12

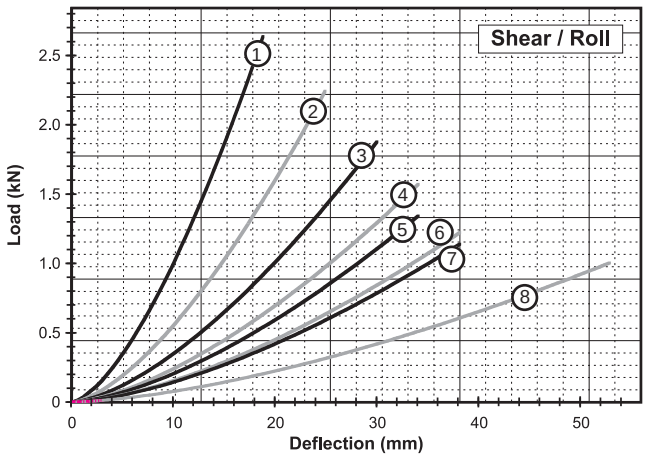

Shear/Roll

Curve	Model	Max Static Load N	Max Deflection mm	Kv (vibration) kN/m	Ks (shock) kN/m
1	WR8-200-08	423	18,8	110	110
2	WR8-400-08	356	24,9	72	72
3	WR8-500-08	311	30,0	49	49
4	WR8-600-08	245	34,0	37	37
5	WR8-700-08	222	34,0	32	32
6	WR8-800-08	200	38,1	25	25
7	WR8-850-08	178	38,1	23	23
8	WR8-900-08	156	52,8	16	16

Notes: Performance provided for full loop models with standard (302/304) stainless steel cable.
Consult ITT Enidine for other options. Do not extrapolate curves.

Wire Rope Isolators
WR12 Series 6-Loop

Technical Data

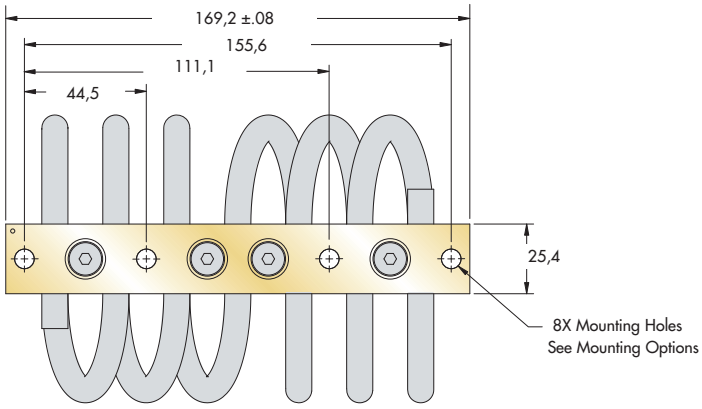

Note: Dimensions are in mm
Tolerances are ± 0,25mm

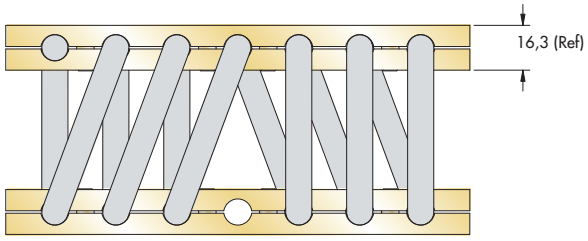

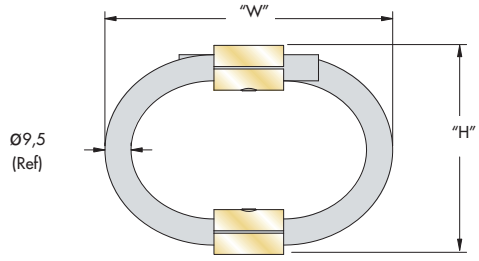

Size	Height "H" mm		Width Ref "W" mm	Unit Weight Kg	Mounting Options	Thru Hole mm	Thread mm	C'sink
WR12-206	71	± 2,54	84	0,83	A, B, C, D, E, S	Ø7,1 $^{+0,13}_{-0,38}$	M6 X 1,0	90°
WR12-306	74		89	0,85				
WR12-406	76		105	0,90				
WR12-506	83		108	0,95				
WR12-606	89		108	0,98				
WR12-706	105		121	1,07				
WR12-806	108		140	1,12				

Model Number Ordering Code

WR12 - 406 - 6 D H M

- M — Add "M" for Metric — For C'sink and Threaded Options
- H — Threaded Hole Options: [ ] - Tapped; [H] - Helical Insert, Free Running; [L] - Helical Insert, Self Locking
- D — Mounting Options: See Chart
- 6 — Number of Loops: 06 (Reduced Number of Loops Available)
- 406 — Isolator Size: See Sizing Table

Mounting Options

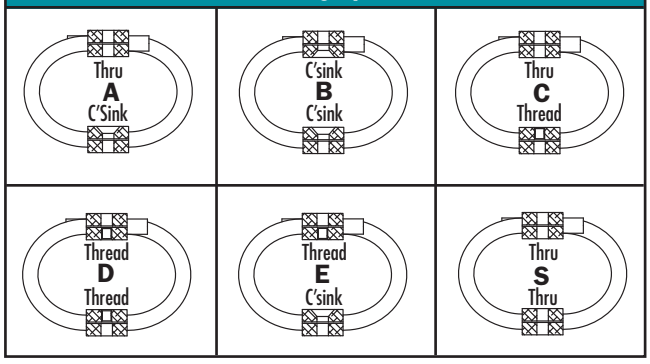

Wire Rope Special Options

Optional materials for the wire rope and mount bars are available upon request. Possibilities include galvanized rope, bell mouth mount bars or stainless steel rope and mount bars. Please contact ITT Enidine to discuss in more detail. Minimum purchase quantities may apply. See page 107.

- Maximum recommended torque for threaded bar 10 Nm
- Operating Temperature Range: -100°C to 260°C

ITT ENGINEERED FOR LIFE
www.enidine.eu Email: info@enidine.eu Tel.: +49 6063 9314 0 Fax: +49 6063 9314 44

Wire Rope Isolators
WR12 Series 6-Loop

Technical Data

Static
Load vs. Deflection

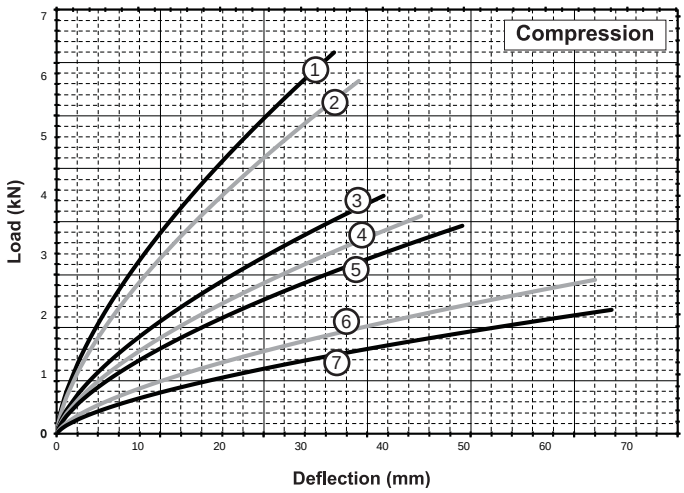

Compression

Curve	Model	Max Static Load N	Max Deflection mm	Kv (vibration) kN/m	Ks (shock) kN/m
1	WR12-206-06	1 090	34,0	275	135
2	WR12-306-06	1 023	37,1	240	114
3	WR12-406-06	801	40,1	180	84
4	WR12-506-06	734	44,7	154	68
5	WR12-606-06	712	49,8	137	60
6	WR12-706-06	396	66,0	65	25
7	WR12-806-06	320	68,1	51	19

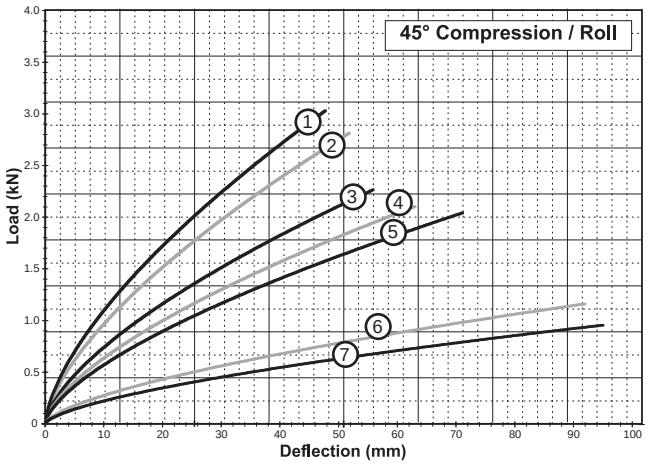

45° Compression/Roll

Curve	Model	Max Static Load N	Max Deflection mm	Kv (vibration) kN/m	Ks (shock) kN/m
1	WR12-206-06	890	47,8	177	77
2	WR12-306-06	823	51,8	156	67
3	WR12-406-06	667	55,9	120	49
4	WR12-506-06	623	63,0	103	40
5	WR12-606-06	601	71,1	92	35
6	WR12-706-06	341	91,9	44	16
7	WR12-806-06	280	95.0	36	12

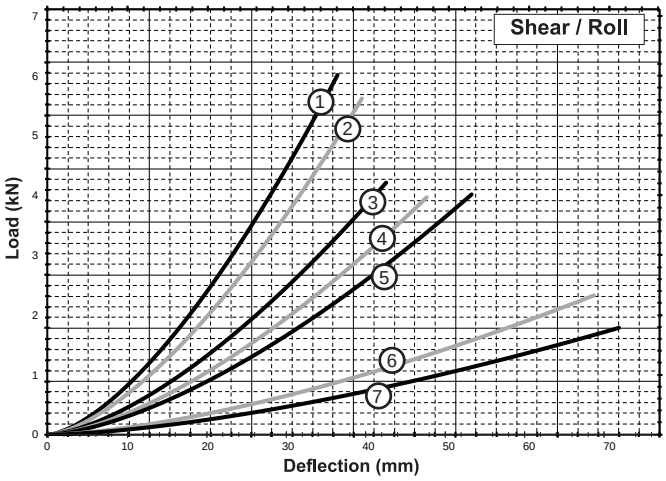

Shear/Roll

Curve	Model	Max Static Load N	Max Deflection mm	Kv (vibration) kN/m	Ks (shock) kN/m
1	WR12-206-06	689	36,1	98	132
2	WR12-306-06	645	39,1	84	113
3	WR12-406-06	489	42,2	58	78
4	WR12-506-06	467	47,2	49	66
5	WR12-606-06	445	52,8	44	59
6	WR12-706-06	200	68,1	20	27
7	WR12-806-06	156	71,1	15	20

Notes: Performance provided for full loop models with standard (302/304) stainless steel cable.
Consult ITT Enidine for other options. Do not extrapolate curves.

Wire Rope Isolators
WR12 Series

Technical Data

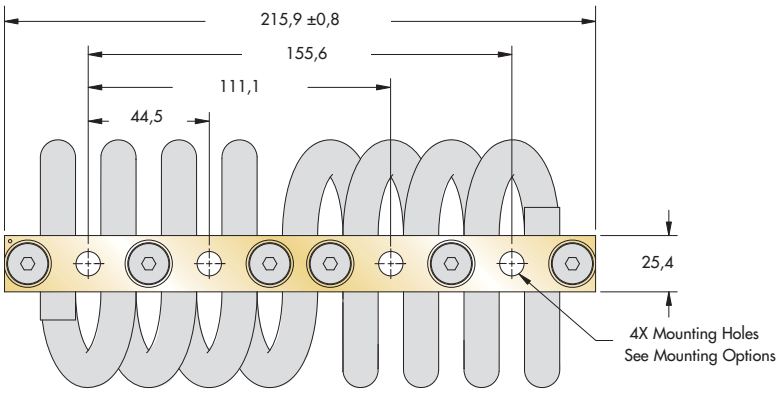

Note: Dimensions are in mm
Tolerances are ± 0,25mm

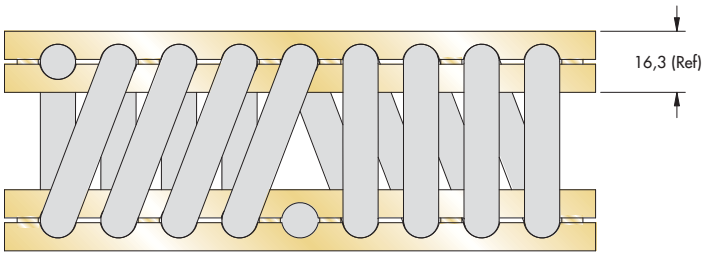

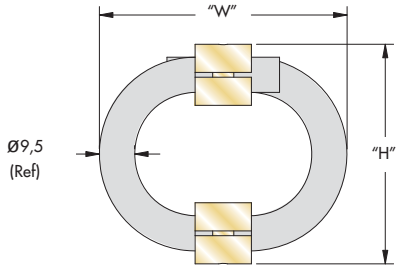

Size	Height "H" mm		Width Ref "W" mm	Unit Weight Kg	Mounting Options	Thru Hole mm	Thread mm	C'sink
WR12-200	71	± 2,54	84	1,10	A, B, C, D, E, S	Ø9,0 + 0,13 - 0,38	*M8 X 1,25	90°
WR12-300	74		89	1,13				
WR12-400	76		105	1,20				
WR12-500	83		108	1,26				
WR12-600	89		108	1,30				
WR12-700	105		121	1,43				
WR12-800	108		140	1,50				

* Tapped M8 x 1.25, Inserts M6 x 1.0

Model Number Ordering Code

WR12 - 400 - 8 D H M

- M — Add "M" for Metric — All Mounting Options
- H — Threaded Hole Options: [ ] - Tapped; [H] - Helical Insert, Free Running; [L] - Helical Insert, Self Locking
- D — Mounting Options: See Chart
- 8 — Number of Loops: 08 (Reduced Number of Loops Available)
- 400 — Isolator Size: See Sizing Table

Mounting Options

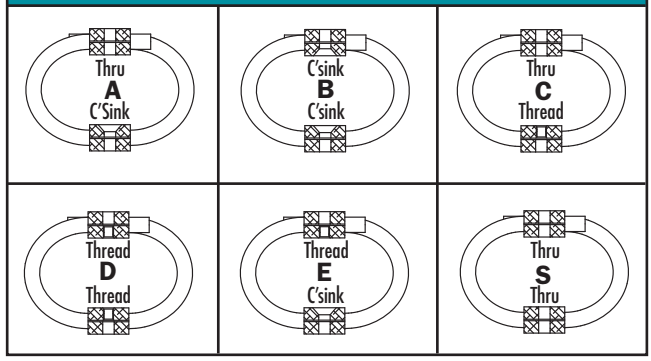

Wire Rope Special Options

Optional materials for the wire rope and mount bars are available upon request. Possibilities include galvanized rope, bell mouth mount bars or stainless steel rope and mount bars. Please contact ITT Enidine to discuss in more detail. Minimum purchase quantities may apply. See page 107.

- Maximum recommended torque for threaded bar is 20 Nm
- Operating Temperature Range: -100°C to 260°C

ITT ENGINEERED FOR LIFE
www.enidine.eu Email: info@enidine.eu Tel.: +49 6063 9314 0 Fax: +49 6063 9314 44

Static
Load vs. Deflection

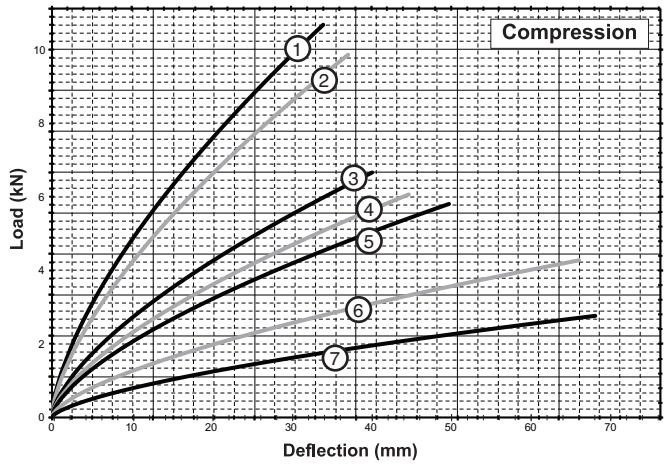

Compression

Curve	Model	Max Static Load N	Max Deflection mm	Kv (vibration) kN/m	Ks (shock) kN/m
1	WR12-200-08	1 468	34,0	366	179
2	WR12-300-08	1 357	37,1	320	152)
3	WR12-400-08	1 068	40,1	242	110
4	WR12-500-08	979	44,7	205	91
5	WR12-600-08	934	49,8	182	79
6	WR12-700-08	534	66,0	86	33
7	WR12-800-08	423	68,1	67	26

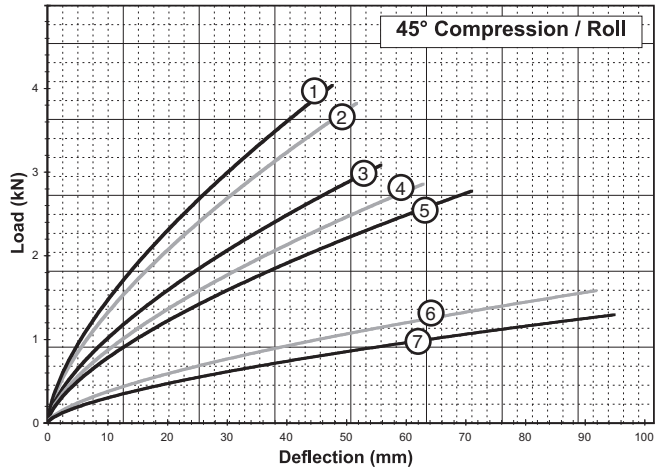

45° Compression/Roll

Curve	Model	Max Static Load N	Max Deflection mm	Kv (vibration) kN/m	Ks (shock) kN/m
1	WR12-200-08	1 179	47,8	236	103
2	WR12-300-08	1 090	51,8	208	88
3	WR12-400-08	890	55,9	159	65
4	WR12-500-08	823	63,0	137	54
5	WR12-600-08	778	71,1	123	47
6	WR12-700-08	467	91,9	60	21
7	WR12-800-08	373	95.0	47	16

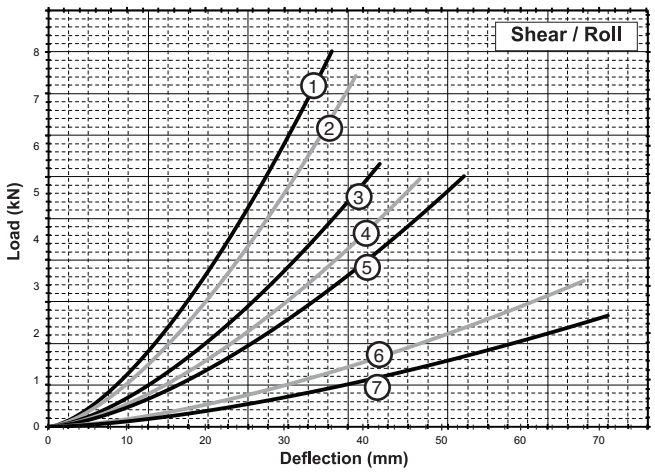

Shear/Roll

Curve	Model	Max Static Load N	Max Deflection mm	Kv (vibration) kN/m	Ks (shock) kN/m
1	WR12-200-08	912	36,1	130	130
2	WR12-300-08	867	39,1	112	112
3	WR12-400-08	667	42,2	77	77
4	WR12-500-08	623	47,2	65	65
5	WR12-600-08	601	52,8	60	60
6	WR12-700-08	267	68,1	27	27
7	WR12-800-08	200	71,1	19	(19

Notes: Performance provided for full loop models with standard (302/304) stainless steel cable.
Consult ITT Enidine for other options. Do not extrapolate curves.

Wire Rope Isolators
WR16 Series 6-Loop

Technical Data

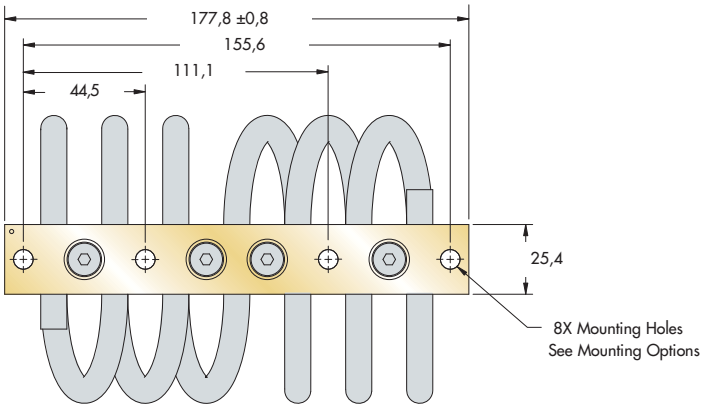

Note: Dimensions are in mm
Tolerances are ± 0,25mm

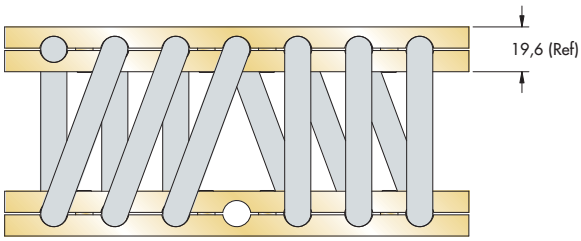

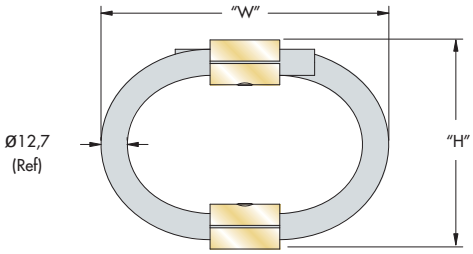

Size	Height "H" mm		Width Ref "W" mm	Unit Weight Kg	Mounting Options	Thru Hole mm	Thread mm	C'sink
WR16-206	76	± 2,54	92	1,36	A, B, C, D, E, S	Ø9,0 +0.13 -0,38	* M8 X 1,25	90°
WR16-306	83		102	1,43				
WR16-406	89		105	1,50				
WR16-606	95		121	1,67				
WR16-706	108		133	1,81				
WR16-806	124		144	2,02				
WR16-856	137		156	2,18				
WR16-906	155		180	2,31				

* Tapped M8 x 1.25, Inserts M7 x 1.0

Model Number Ordering Code

WR16 - 406 - 6 D H M

- M — Add "M" for Metric — For C'sink and Threaded Options
- H — Threaded Hole Options: [ ] - Tapped; [H] - Helical Insert, Free Running; [L] - Helical Insert, Self Locking
- D — Mounting Options: See Chart
- 6 — Number of Loops: 06 (Reduced Number of Loops Available)
- 406 — Isolator Size: See Sizing Table

Mounting Options

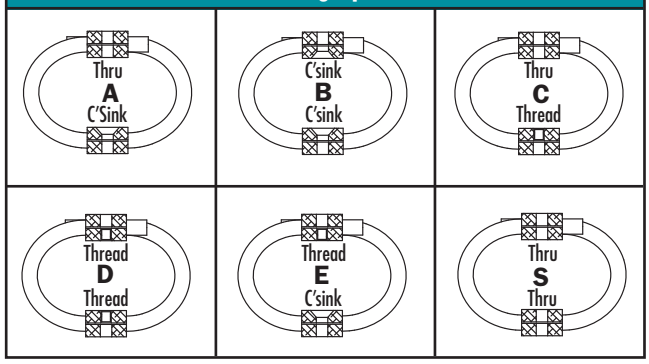

Wire Rope Special Options

Optional materials for the wire rope and mount bars are available upon request. Possibilities include galvanized rope, bell mouth mount bars or stainless steel rope and mount bars. Please contact ITT Enidine to discuss in more detail. Minimum purchase quantities may apply. See page 107.

- Maximum recommended torque for threaded bar is 20 Nm
- Operating Temperature Range: -100°C to 260°C

ITT ENGINEERED FOR LIFE
www.enidine.eu Email: info@enidine.eu Tel.: +49 6063 9314 0 Fax: +49 6063 9314 44

Static
Load vs. Deflection

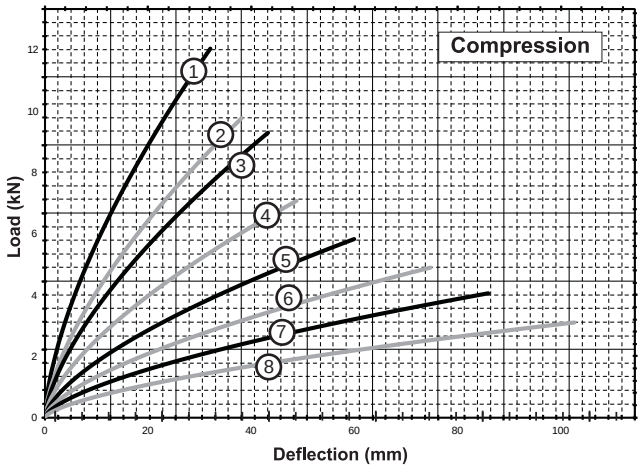

Compression

Curve	Model	Max Static Load N	Max Deflection mm	Kv (vibration) kN/m	Ks (shock) kN/m
1	WR16-206-06	3 556	32,0	931	458
2	WR16-306-06	2 864	38,1	663	311
3	WR16-406-06	2 697	43,2	576	261
4	WR16-606-06	2 082	48,8	412	177
5	WR16-706-06	1 688	59,9	294	119
6	WR16-806-06	1 419	74,7	216	79
7	WR16-856-06	1 191	85,9	162	57
8	WR16-906-06	912	102,6	111	37

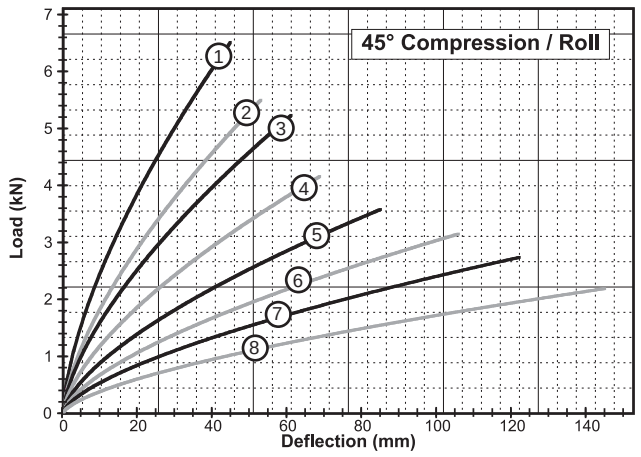

45° Compression/Roll

Curve	Model	Max Static Load N	Max Deflection mm	Kv (vibration) kN/m	Ks (shock) kN/m
1	WR16-206-06	1 935	44,7	405	177
2	WR16-306-06	1 624	52,8	298	126
3	WR16-406-06	1 535	61,0	263	105
4	WR16-606-06	1 223	68,6	194	74
5	WR16-706-06	1 045	84,8	144	51
6	WR16-806-06	912	105,7	110	37
7	WR16-856-06	801	121,9	88	28
8	WR16-906-06	623	144,8	62	19

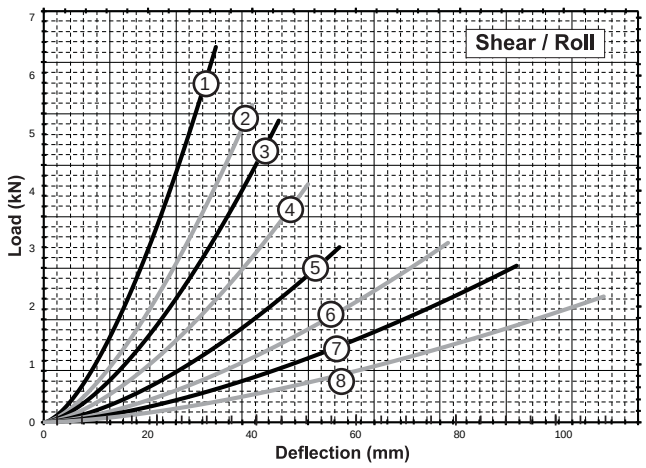

Shear/Roll

Curve	Model	Max Static Load N	Max Deflection mm	Kv (vibration) kN/m	Ks (shock) kN/m
1	WR16-206-06	1 043	33,0	154	154
2	WR16-306-06	856	40,1	109	109
3	WR16-406-06	794	45,2	91	91
4	WR16-606-06	638	50,8	64	64
5	WR16-706-06	420	56,9	42	42
6	WR16-806-06	311	77,7	32	32
7	WR16-856-06	234	90,9	23	23
8	WR16-906-06	156	107,7	16	16

Notes: Performance provided for full loop models with standard (302/304) stainless steel cable.
Consult ITT Enidine for other options. Do not extrapolate curves.

Wire Rope Isolators
WR16 Series

Technical Data

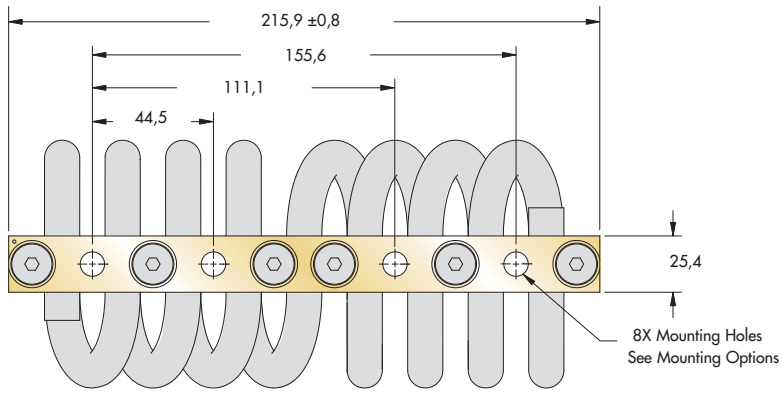

Note: Dimensions are in mm
Tolerances are ± 0,25mm

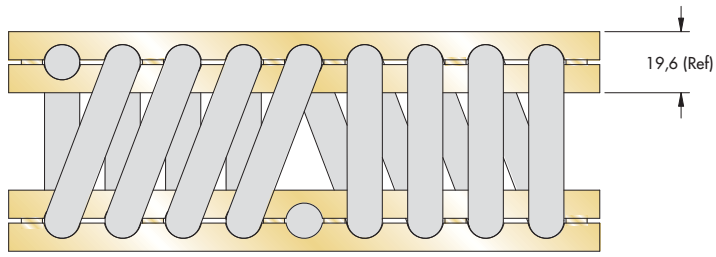

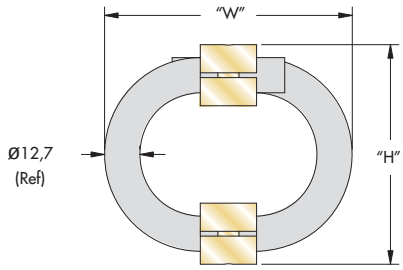

Size	Height "H" mm		Width Ref "W" mm	Unit Weight Kg	Mounting Options	Thru Hole mm	Thread mm	C'sink
WR16-200	76	± 2,54	92	1,81	A, B, C, D, E, S	Ø9.0 +0.13 - 0.38	*M8 X 1,25	90°
WR16-300	83		102	1,91				
WR16-400	89		105	2,00				
WR16-600	95		121	2,22				
WR16-700	108		133	2,40				
WR16-800	124		144	2,70				
WR16-850	137		156	2,90				
WR16-900	155		180	3,09				

* Tapped M8 x 1.25, Inserts M7 x 1.0

Model Number Ordering Code

WR16 - 400 - 8 D H M

- M — Add "M" for Metric — For C'sink and Threaded Options
- H — Threaded Hole Options: [ ] - Tapped; [T] - Tapped; [H] - Helical Insert, Free Running; [L] - Helical Insert, Self Locking
- D — Mounting Options: See Chart
- 8 — Number of Loops: 08 (Reduced Number of Loops Available)
- 400 — Isolator Size: See Sizing Table

Mounting Options

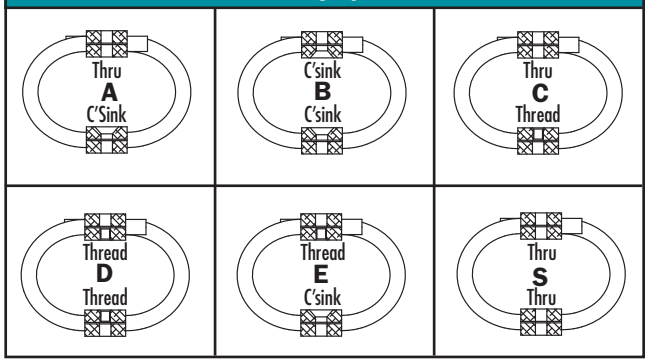

Wire Rope Special Options

Optional materials for the wire rope and mount bars are available upon request. Possibilities include galvanized rope, bell mouth mount bars or stainless steel rope and mount bars. Please contact ITT Enidine to discuss in more detail. Minimum purchase quantities may apply. See page 107.

- Maximum recommended torque for threaded bar is 20 Nm
- Operating Temperature Range: -100°C to 260°C

ITT ENGINEERED FOR LIFE
www.enidine.eu Email: info@enidine.eu Tel.: +49 6063 9314 0 Fax: +49 6063 9314 44

Static
Load vs. Deflection

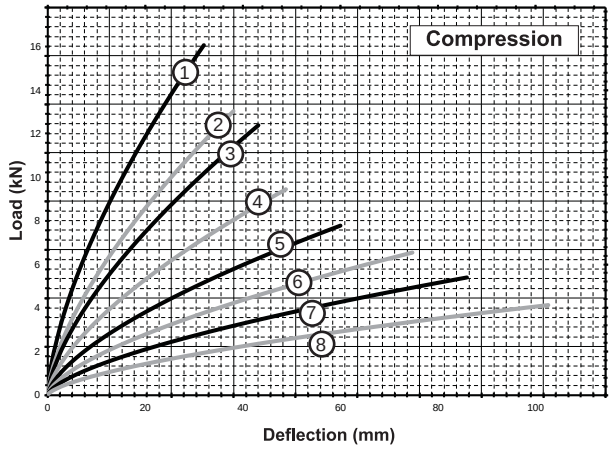

Compression

Curve	Model	Max Static Load N	Max Deflection mm	Kv (vibration) kN/m	Ks (shock) kN/m
1	WR16-200-08	4 742	32,0	1 241	612
2	WR16-300-08	3 809	38,1	884	416
3	WR16-400-08	3 586	43,2	766	348
4	WR16-600-08	2 776	48,8	548	235
5	WR16-700-08	2 251	59,9	391	157
6	WR16-800-08	1 908	74,7	287	106
7	WR16-850-08	1 588	85,9	217	77
8	WR16-900-08	1 201	102,6	148	49

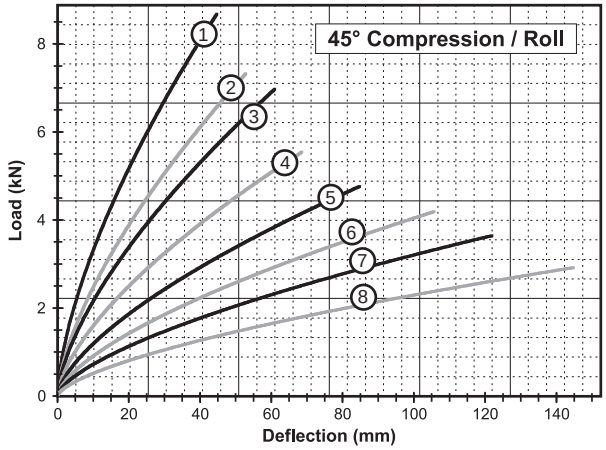

45° Compression/Roll

Curve	Model	Max Static Load N	Max Deflection mm	Kv (vibration) kN/m	Ks (shock) kN/m
1	WR16-200-08	2 580	44,7	539	236
2	WR16-300-08	2 157	52,8	398	168
3	WR16-400-08	2 046	61,0	349	138
4	WR16-600-08	1 624	68,6	259	98
5	WR16-700-08	1 401	84,8	193	68
6	WR16-800-08	1 223	105,7	147	49
7	WR16-850-08	1 068	121,9	117	37
8	WR16-900-08	823	144,8	83	25

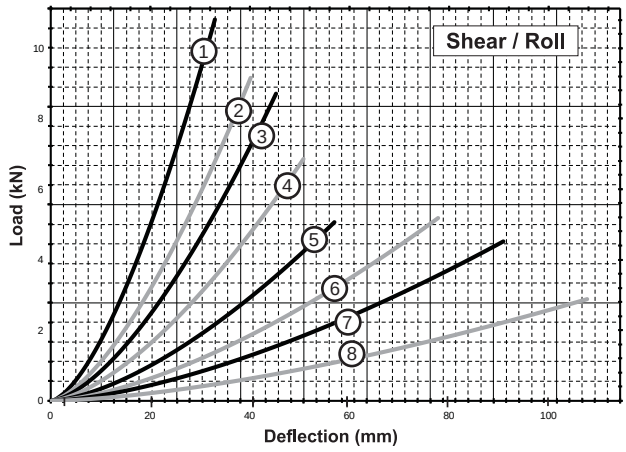

Shear/Roll

Curve	Model	Max Static Load N	Max Deflection mm	Kv (vibration) kN/m	Ks (shock) kN/m
1	WR16-200-08	2 055	33,0	206	206
2	WR16-300-08	1 199	40,1	145	145
3	WR16-400-08	1 090	45,2	121	121
4	WR16-600-08	841	50,8	85	85
5	WR16-700-08	560	56,9	56	56
6	WR16-800-08	420	77,7	42	42
7	WR16-850-08	311	90,9	32	32
8	WR16-900-08	202	107,7	21	21

Notes: Performance provided for full loop models with standard (302/304) stainless steel cable.
Consult ITT Enidine for other options. Do not extrapolate curves.

Wire Rope Isolators
WR20 Series

Technical Data

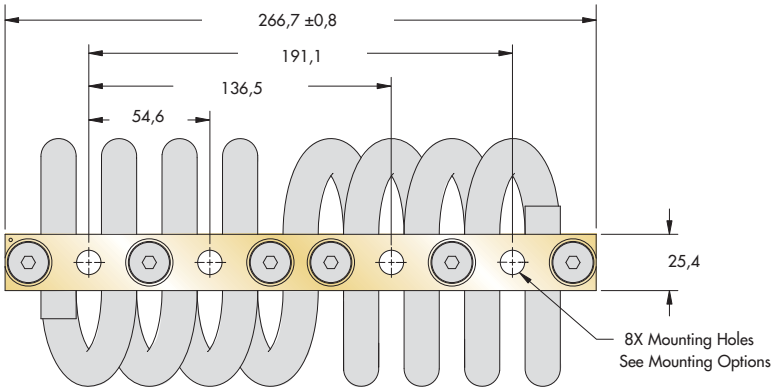

Note: Dimensions are in mm
Tolerances are ± 0,25mm

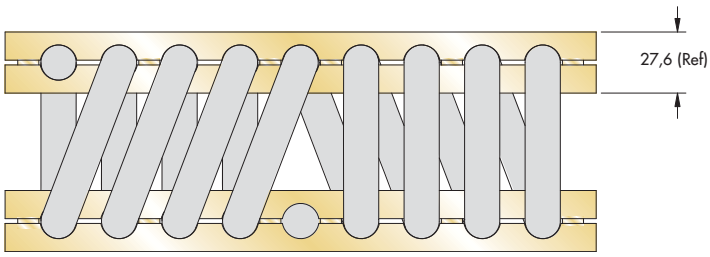

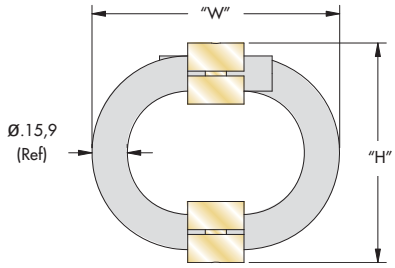

Size	Height "H" mm		Width Ref "W" mm	Unit Weight Kg	Mounting Options	Thru Hole mm	Thread mm	C'sink
WR20-200	89	± 3,30	102	3,00	C, D	Ø11,0 $^{+0,13}_{-0,38}$	M10 X 1,5	90°
WR20-300	99		112	3,20	A, B, C, D, E, S			
WR20-400	102		121	3,40				
WR20-600	109		135	3,70				
WR20-700	119		152	4,00				
WR20-800	127		165	4,31				
WR20-900	135		178	4,63				

Model Number Ordering Code

WR20 - 400 - 8 D H M

- M — Add "M" for Metric — For C'sink and Threaded Options
- H — Threaded Hole Options: [ ] - Tapped; [H] - Helical Insert, Free Running; [L] - Helical Insert, Self Locking
- D — Mounting Options: See Chart
- 8 — Number of Loops: 08 (Reduced Number of Loops Available)
- 400 — Isolator Size: See Sizing Table

Mounting Options

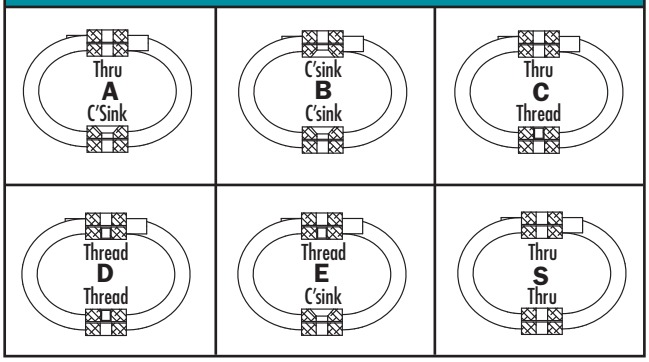

Wire Rope Special Options

Optional materials for the wire rope and mount bars are available upon request. Possibilities include galvanized rope, bell mouth mount bars or stainless steel rope and mount bars. Please contact ITT Enidine to discuss in more detail. Minimum purchase quantities may apply. See page 107.

- Maximum recommended torque for threaded bar is 50 Nm
- Operating Temperature Range: -100°C to 260°C

ITT ENGINEERED FOR LIFE
www.enidine.eu Email: info@enidine.eu Tel.: +49 6063 9314 0 Fax: +49 6063 9314 44

Static
Load vs. Deflection

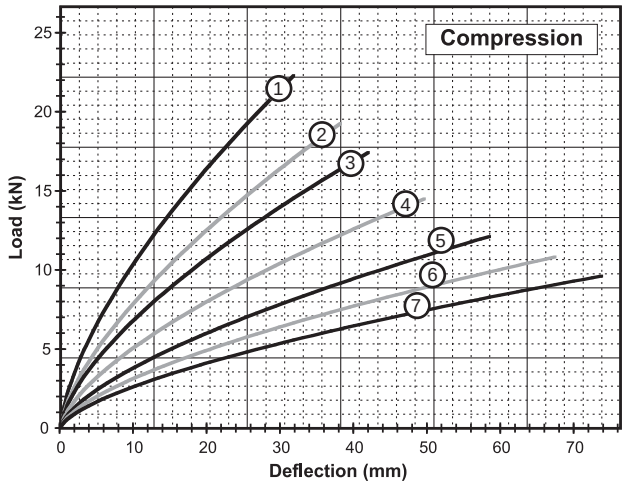

Compression

Curve	Model	Max Static Load N	Max Deflection mm	Kv (vibration) kN/m	Ks (shock) kN/m
1	WR20-200-08	6 450	31,8	1 676	849
2	WR20-300-08	5 471	38,1	1 259	609
3	WR20-400-08	5 071	41,9	1 105	504
4	WR20-600-08	4 204	49,5	821	356
5	WR20-700-08	3 514	58,4	616	252
6	WR20-800-08	3 180	67,3	511	196
7	WR20-900-08	2 802	73,7	427	159

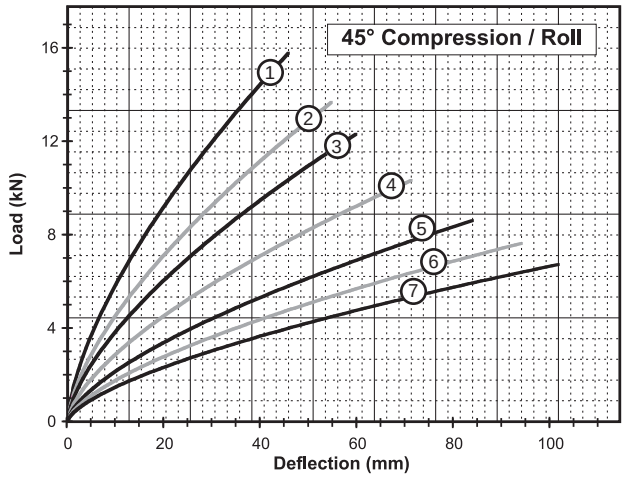

45° Compression/Roll

Curve	Model	Max Static Load N	Max Deflection mm	Kv (vibration) kN/m	Ks (shock) kN/m
1	WR20-200-08	4 537	45,7	951	419
2	WR20-300-08	3 981	54,6	741	305
3	WR20-400-08	3 581	59,7	627	250
4	WR20-600-08	2 980	71,1	468	177
5	WR20-700-08	2 491	83,8	350	124
6	WR20-800-08	2 246	94,0	285	98
7	WR20-900-08	1 979	101,6	238	81

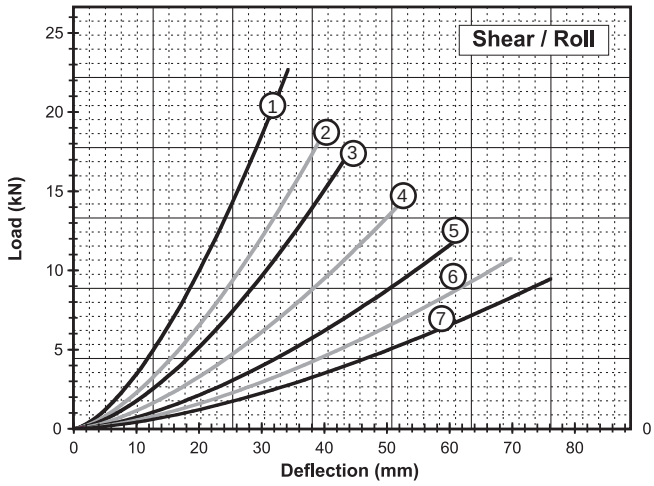

Shear/Roll

Curve	Model	Max Static Load N	Max Deflection mm	Kv (vibration) kN/m	Ks (shock) kN/m
1	WR20-200-08	3 514	34,3	524	524
2	WR20-300-08	3 025	40,6	375	375
3	WR20-400-08	2 624	43,2	308	308
4	WR20-600-08	2 135	52,1	215	215
5	WR20-700-08	1 512	61,0	152	152
6	WR20-800-08	1 223	69,9	123	123
7	WR20-900-08	979	76,2	98	98

Notes: Performance provided for full loop models with standard (302/304) stainless steel cable.
Consult ITT Enidine for other options. Do not extrapolate curves.

Wire Rope Isolators
WR28 Series

Technical Data

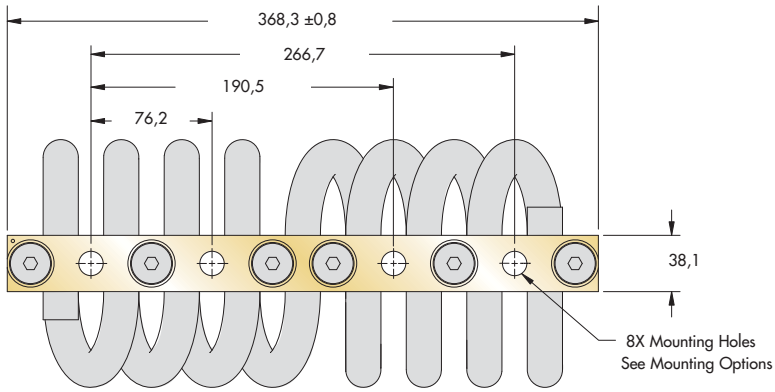

Note: Dimensions are in mm
Tolerances are ± 0,25mm

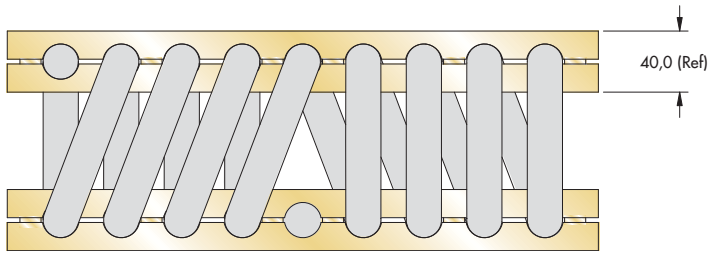

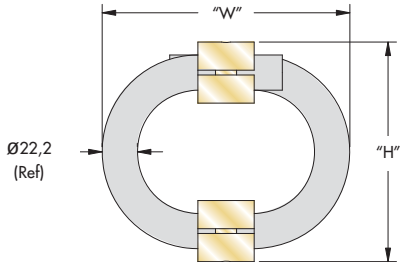

Size	Height "H" in. mm		Width Ref "W" in. mm	Unit Weight Kg	Mounting Options	Thru Hole mm	Thread mm	C'sink
WR28-200	133	± 6,35	140	8,40	C, D	Ø13,5 $^{+0,13}_{-0,38}$	M12 X 1,75	90°
WR28-400	152		165	9,53	A, B, C, D, E, S			
WR28-600	159		178	9,90				
WR28-800	191		210	11,50				
WR28-900	216		235	12,70				
WR28-950	216		286	13,90				

Model Number Ordering Code

WR28 - 400 - 8 D H M

- M — Add "M" for Metric — For C'sink and Threaded Options
- H — Threaded Hole Options: [ ] - Tapped; [H] - Helical Insert, Free Running; [L] - Helical Insert, Self Locking
- D — Mounting Options: See Chart
- 8 — Number of Loops: 08 (Reduced Number of Loops Available)
- 400 — Isolator Size: See Sizing Table

Mounting Options

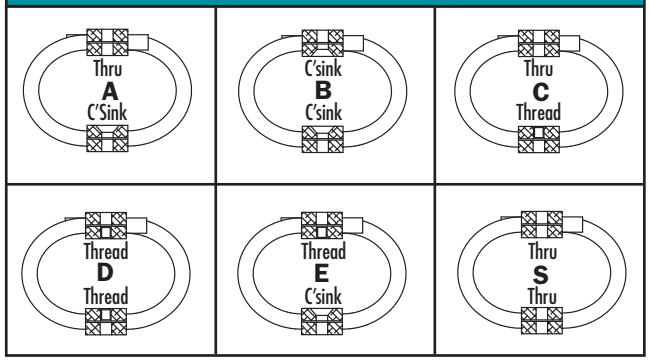

Wire Rope Special Options

Optional materials for the wire rope and mount bars are available upon request. Possibilities include galvanized rope, bell mouth mount bars or stainless steel rope and mount bars. Please contact ITT Enidine to discuss in more detail. Minimum purchase quantities may apply. See page 107.

- Maximum recommended torque for threaded bar 100 Nm
- Operating Temperature Range: -100°C to 260°C

ITT ENGINEERED FOR LIFE
www.enidine.eu Email: info@enidine.eu Tel.: +49 6063 9314 0 Fax: +49 6063 9314 44

Static
Load vs. Deflection

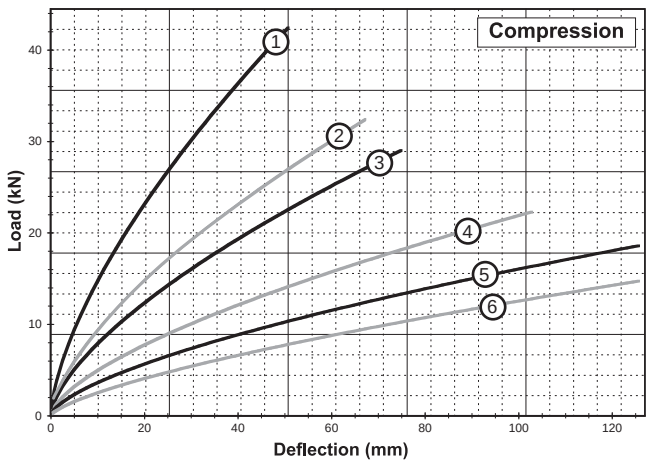

Compression

Curve	Model	Max Static Load kN	Max Deflection mm	Kv (vibration) kN/m	Ks (shock) kN/m
1	WR28-200-08	12,28	50,8	2 362	1 010
2	WR28-400-08	9,43	67,3	1 513	585
3	WR28-600-08	8,45	74,9	1 270	469
4	WR28-800-08	6,54	102,9	800	263
5	WR28-900-08	5,43	125,7	585	180
6	WR28-950-08	3,74	125,7	377	138

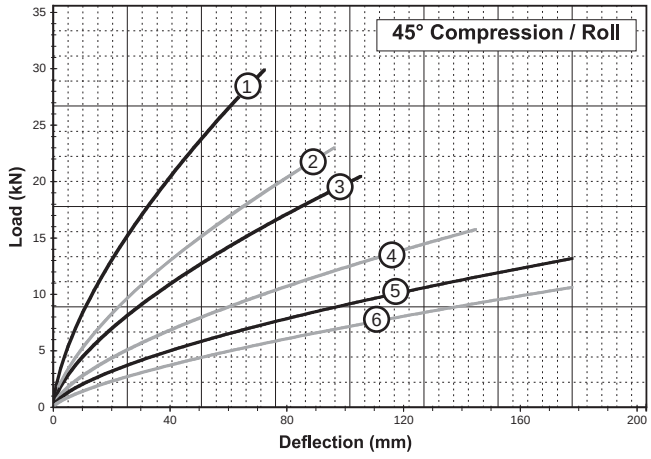

45° Compression/Roll

Curve	Model	Max Static Load kN	Max Deflection mm	Kv (vibration) kN/m	Ks (shock) kN/m
1	WR28-200-08	8,72	72,4	1 348	503
2	WR28-400-08	6,67	96,5	860	289
3	WR28-600-08	6,01	105,4	718	235
4	WR28-800-08	4,45	144,8	448	131
5	WR28-900-08	3,25	177,8	327	89
6	WR28-950-08	2,11	177,8	212	70

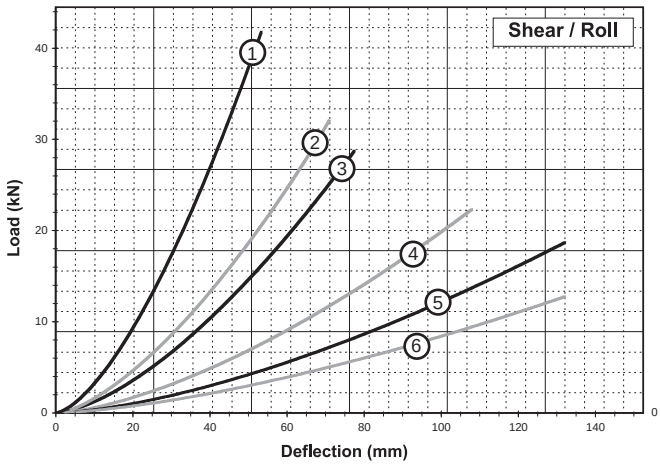

Shear/Roll

Curve	Model	Max Static Load kN	Max Deflection mm	Kv (vibration) kN/m	Ks (shock) kN/m
1	WR28-200-08	6,14	53,3	618	618
2	WR28-400-08	3,54	71,1	356	356
3	WR28-600-08	2,89	77,5	291	291
4	WR28-800-08	1,62	108,0	163	163
5	WR28-900-08	1,11	132,1	112	112
6	WR28-950-08	0,76	132,1	77	77

Notes: Performance provided for full loop models with standard (302/304) stainless steel cable.
Consult ITT Enidine for other options. Do not extrapolate curves.

Wire Rope Isolators
WR36 Series

Technical Data

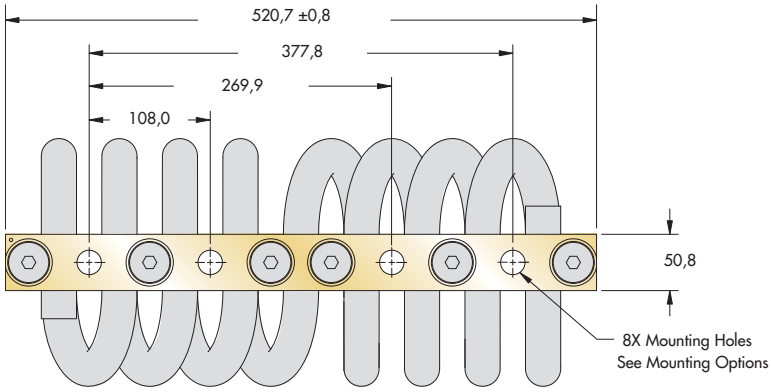

Note: Dimensions are in mm
Tolerances are ± 0,25mm

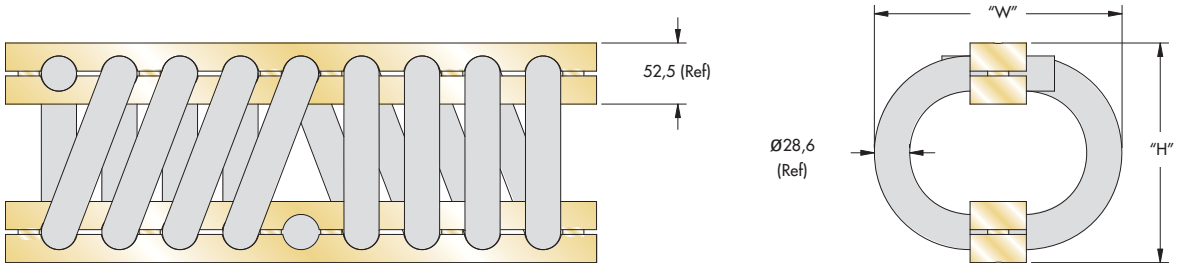

Size	Height "H" mm		Width Ref "W" mm	Unit Weight Kg	Mounting Options	Thru Hole mm	Thread mm	C'sink
WR36-200	178	± 6,35	216	20,9	A, B, C, D, E, S	Ø19.8 $^{+0,13}_{-0,38}$	M18 X 2,5	90°
WR36-400	216		241	24,0				
WR36-600	235		260	25,0				

Model Number Ordering Code

WR36 - 400 - 8 D H M

- M — Add "M" for Metric — For C'sink and Threaded Options
- H — Threaded Hole Options: [ ] - Tapped; [H] - Helical Insert, Free Running; [L] - Helical Insert, Self Locking
- D — Mounting Options: See Chart
- 8 — Number of Loops: 08 (Reduced Number of Loops Available)
- 400 — Isolator Size: See Sizing Table

Mounting Options

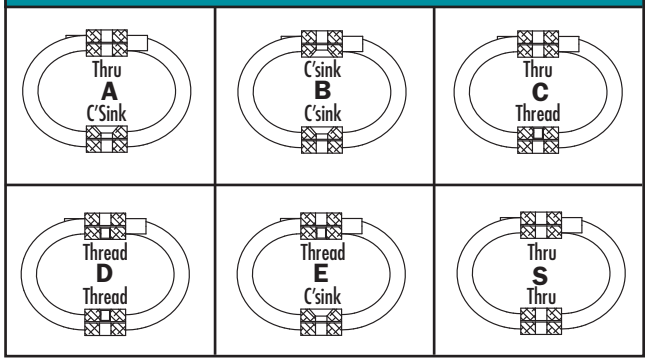

Wire Rope Special Options

Optional materials for the wire rope and mount bars are available upon request. Possibilities include galvanized rope, bell mouth mount bars or stainless steel rope and mount bars. Please contact ITT Enidine to discuss in more detail. Minimum purchase quantities may apply. See page 107.

- Maximum recommended torque for threaded bar is 300 Nm
- Operating Temperature Range: -100°C to 260°C

ITT ENGINEERED FOR LIFE
www.enidine.eu Email: info@enidine.eu Tel.: +49 6063 9314 0 Fax: +49 6063 9314 44

Static
Load vs. Deflection

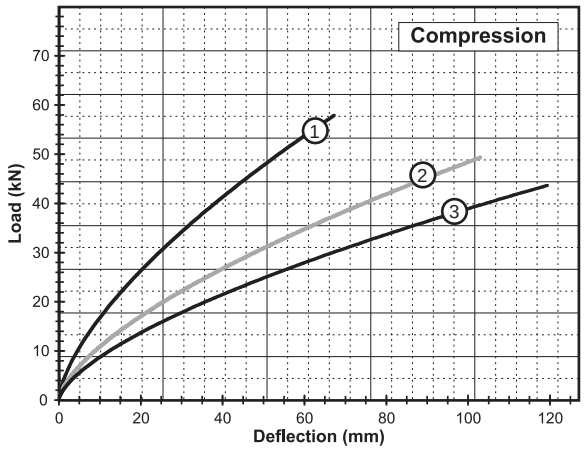

Compression

Curve	Model	Max Static Load kN	Max Deflection mm	Kv (vibration) kN/m	Ks (shock) kN/m
1	WR36-200-08	16,86	67,3	2 706	1 044
2	WR36-400-08	14,50	102,9	1 774	583
3	WR36-600-08	12,77	119,4	1 415	445

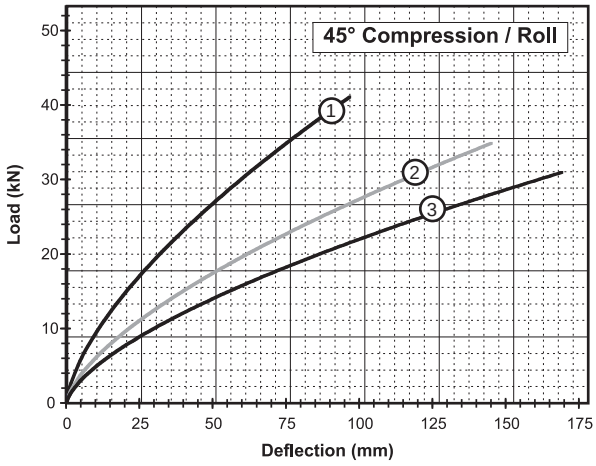

45° Compression/Roll

Curve	Model	Max Static Load kN	Max Deflection mm	Kv (vibration) kN/m	Ks (shock) kN/m
1	WR36-200-08	11,97	96,5	1 541	518
2	WR36-400-08	9,88	144,8	993	292
3	WR36-600-08	7,96	168,9	799	222

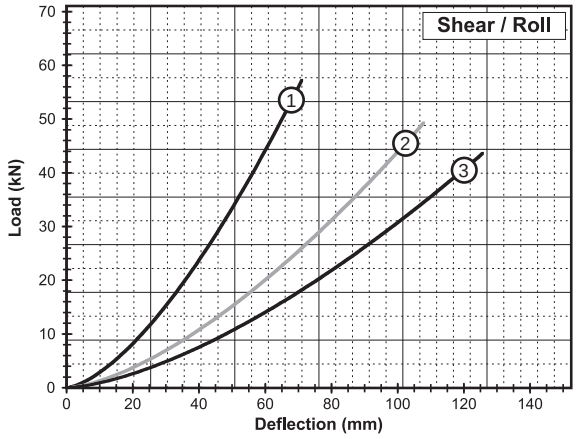

Shear/Roll

Curve	Model	Max Static Load kN	Max Deflection mm	Kv (vibration) kN/m	Ks (shock) kN/m
1	WR36-200-08	6,32	71,1	636	636
2	WR36-400-08	3,60	108,0	361	361
3	WR36-600-08	2,74	125,7	275	275

Notes: Performance provided for full loop models with standard (302/304) stainless steel cable.
Consult ITT Enidine for other options. Do not extrapolate curves.

Wire Rope Isolators
WR40 Series

Technical Data

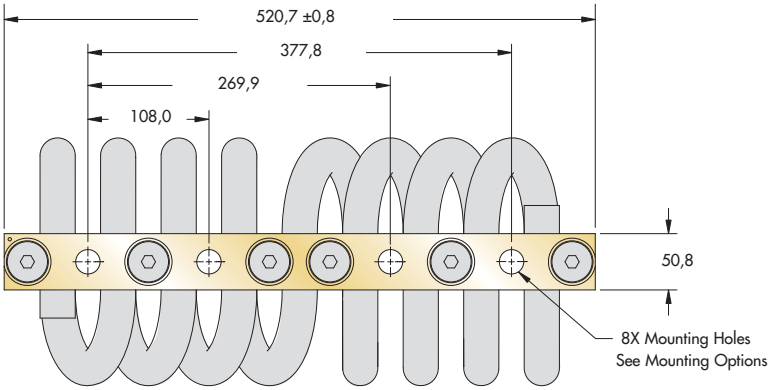

Note: Dimensions are in mm
Tolerances are ± 0,25mm

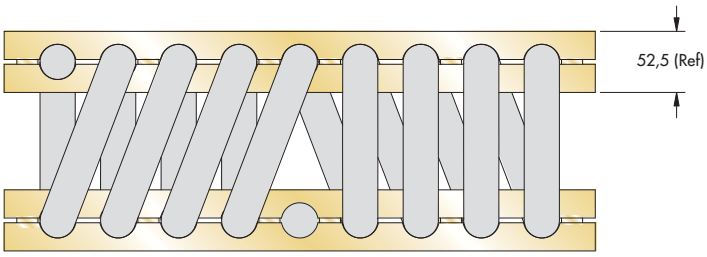

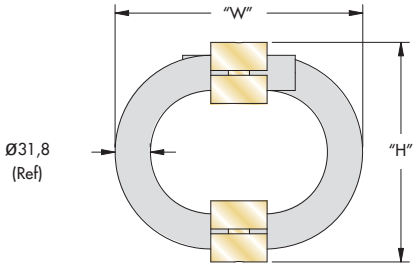

Size	Height "H" mm		Width Ref "W" mm	Unit Weight Kg	Mounting Options	Thru Hole mm	Thread mm	C'sink
WR40-200	178	± 6,35	210	24,0	A, B, C, D, E, S	Ø19,8 +0,13 -0,38	M18 X 2,5	90°
WR40-400	216		248	27,2				

Model Number Ordering Code

WR40 - 400 - 8 D H M

- M — Add "M" for Metric — For C'sink and Threaded Options
- H — Threaded Hole Options: [ ] - Tapped; [H] - Helical Insert, Free Running; [L] - Helical Insert, Self Locking
- D — Mounting Options: See Chart
- 8 — Number of Loops: 08 (Reduced Number of Loops Available)
- 400 — Isolator Size: See Sizing Table

Mounting Options

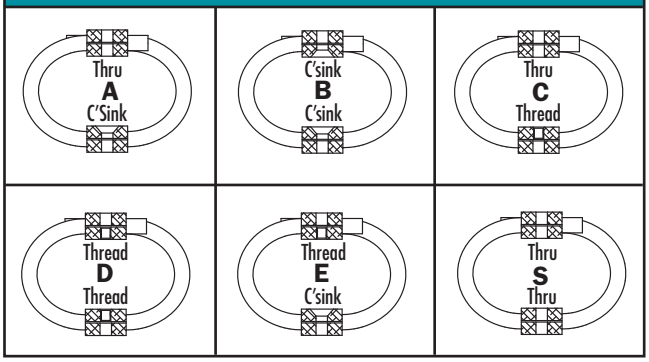

Wire Rope Special Options

Optional materials for the wire rope and mount bars are available upon request. Possibilities include galvanized rope, bell mouth mount bars or stainless steel rope and mount bars. Please contact ITT Enidine to discuss in more detail. Minimum purchase quantities may apply. See page 107.

- Maximum recommended torque for threaded bar is 300 Nm
- Operating Temperature Range: -100°C to 260°C

ITT ENGINEERED FOR LIFE
www.enidine.eu Email: info@enidine.eu Tel.: +49 6063 9314 0 Fax: +49 6063 9314 44

Static Load vs. Deflection

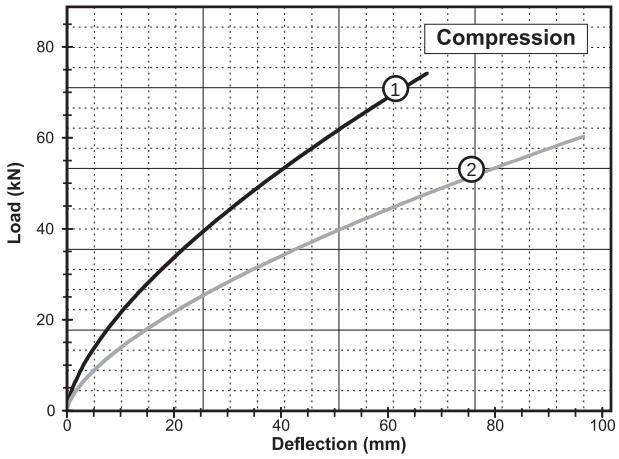

Compression

Curve	Model	Max Static Load kN	Max Deflection mm	Kv (vibration) kN/m	Ks (shock) kN/m
1	WR40-200-08	21,62	67,3	3 468	1 338
2	WR40-400-08	17,61	96,5	2 236	758

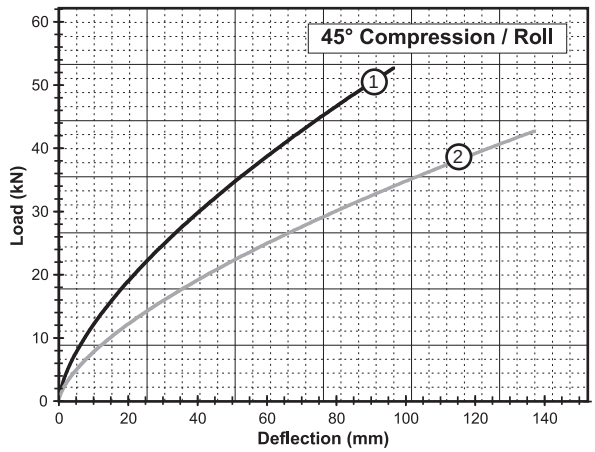

45° Compression/Roll

Curve	Model	Max Static Load kN	Max Deflection mm	Kv (vibration) kN/m	Ks (shock) kN/m
1	WR40-200-08	15,30	96,5	1 968	664
2	WR40-400-08	12,41	137,2	1 256	378

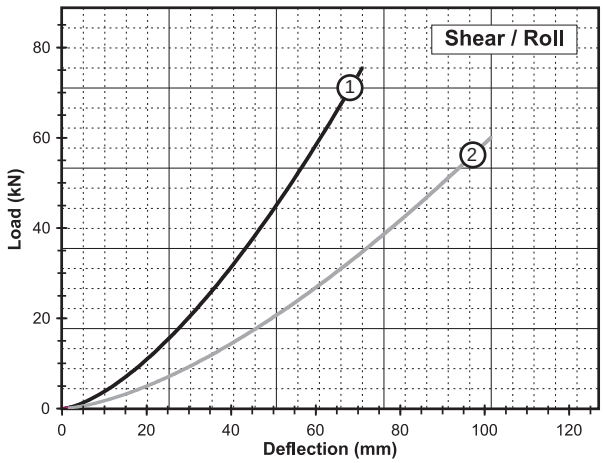

Shear/Roll

Curve	Model	Max Static Load kN	Max Deflection mm	Kv (vibration) kN/m	Ks (shock) kN/m
1	WR40-200-08	8,32	71,1	839	839
2	WR40-400-08	4,64	101,6	468	468

Notes: Performance provided for full loop models with standard (302/304) stainless steel cable.
Consult ITT Enidine for other options. Do not extrapolate curves.

U.S. Patents 6,290,217
6,244,579

Compact Wire Rope Isolators

For the best in vibration isolation capabilities, choose ITT Enidine's **Compact Wire Rope Isolators**. Smaller than traditional wire ropes, these unique isolators provide cost-effective, simultaneous shock and vibration attenuation where package space is at a premium.

ITT Enidine Compact Wire Rope Isolators feature an easy, single-point installation, which allows them to be installed in virtually any application. Their small size also permits the isolation of individual system components, making them ideal for use in sensitive equipment and electronics. Just as with our standard ITT Enidine Wire Rope Isolators, ITT Enidine Compact Wire Rope Isolators feature a patented, all-metal design and components that ensure maximum reliability, regardless of temperature or substrate requirement, and that can help meet MILSPECS similar to those of our Wire Rope Isolator series. Please refer to our "Compact Wire Rope Isolator Overview and Application Worksheet" on pages 139-140 for more information.

If your application is outside the standard Compact Wire Rope Isolator product range, please consult the standard Wire Rope Isolator or HERM portions of this catalog. If a standard solution is still not available, ITT Enidine engineers can design an isolator to suit your specifications.

For further information on ITT Enidine Wire Rope, HERM and Compact Wire Rope Isolator products, technical assistance and pricing, please contact ITT Enidine or your nearest authorized distributor. A list of ITT Enidine distributors can be found by visiting our website at www.enidine.eu.

Overview

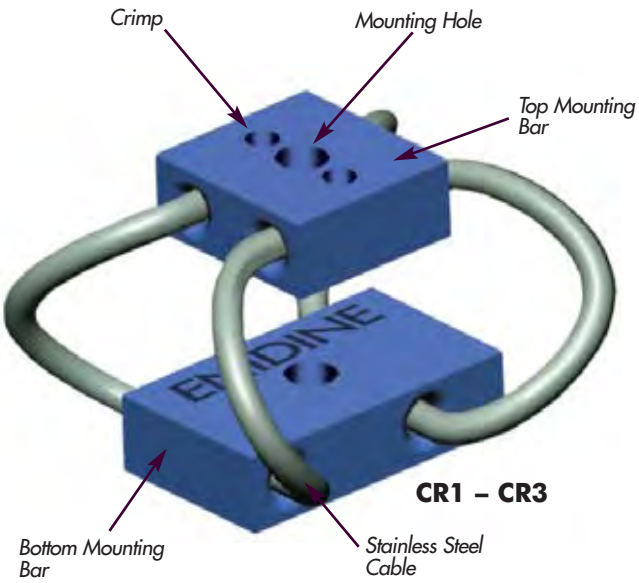

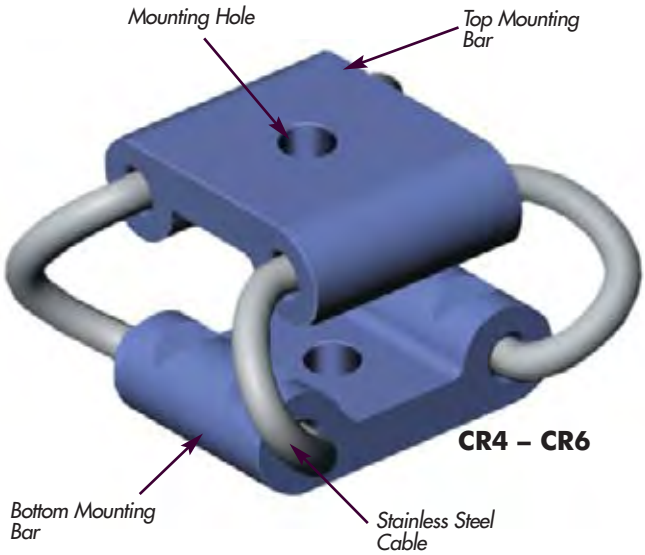

Typical Applications

Electronic Motor Isolation

Custom Components

Medical Equipment

Compact Wire Rope Isolators
CR Series

Overview

Materials and Finishes:

Standard: Wire Rope: 302/304 Stainless Steel
Mount Bars: 6061-T6 Aluminum, Chemical Conversion Coated per MIL-C-5541, Class 1A (RoHS Compliant)
Threads: Tapped

Optional: Mount Bars: 6061-T6 Aluminum, Anodized per MIL-A-8625, Type II, Class 1 (RoHS Compliant)
302/304 Stainless Steel per ASTM A276, Passivated

Special: Consult ITT Enidine

Isolator Options:

Mounting: ITT Enidine offers a full range of mounting combinations of thru-hole, countersunk, and threaded bars. All configurations are available in either Imperial or Metric styles. Add an "M" after the mounting option for Metric. Some models have reduced mounting options available due to limited fastener installation space. Consult ITT Enidine if a preferred mounting configuration is not listed.

Bellmouth: The bellmouth feature includes mount bars with radii manufactured into the wire rope hole edges. This option is recommended for high fatigue applications. Compact rope models (CR1 – CR6) include this feature as the standard.

Performance:

Stiffness (Kv or Ks):
Compact wire rope isolators exhibit non-linear stiffness behavior. Small deflections, usually associated with vibration isolation, will have a different spring rate than larger shock deflections. ITT Enidine publishes typical vibration stiffness values (Kv), and average shock stiffness values (Ks) within the catalog. These values can be used with the provided equations listed on Page 140 to predict system performance.

Isolator Axes:
Compact wire rope isolators are multi-axis isolators. The diagram below includes load axis definitions and deflection considerations.

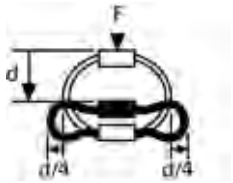

COMPRESSION

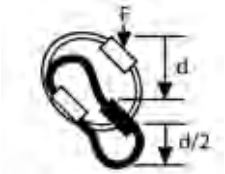

45º COMPRESSION/ROLL

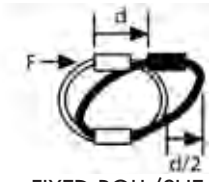

FIXED ROLL/SHEAR

Damping: Typically 5-15%, depending on size and input level. For specific damping considerations, please consult ITT Enidine.

Mounting Orientation:
The diagrams below illustrate typical mounting orientations.

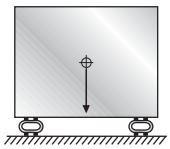
COMPRESSION

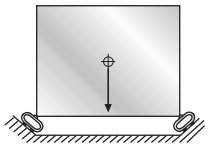
45º COMPRESSION/ROLL

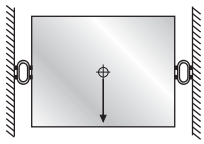
FIXED ROLL/SHEAR

Stabilizers:
Stabilizers are used to control deflections of tall supported masses. Stabilizers are typically recommended when the height equals 2-times the width or depth dimension. In most applications, the quantity of stabilizers required are half as many as the base isolators, and selected one size softer than the base isolators.

APPLICATION WORKSHEET - INPUTS METRIC

		METRIC
PART I: SYSTEM DATA:		
1. Total Supported Load (W_T):	W_T = _____ Kg x 9,81 = _____ N	
2. Number of Isolators (n):	n = _____	
3. Static Load per Isolator (W):	$W = \frac{W_T}{n}$	W = _____ N*
* Assumes a central CG		
4. Load Axis: Compression Shear or Roll 45° Compression/Roll		Load Axis _____
PART II: VIBRATION SIZING:		
1. Input Excitation Frequency	f_i = _____ Hz $\left(= \frac{rpm}{60}\right)$	
2. System Response Natural Frequency for 80% isolation:	$f_n = \frac{f_i}{3,0}$ = _____Hz	
3. Maximum Isolator Vibration Stiffness: (K_V)	$K_v = \frac{W(2\pi f_n)^2}{g}$ $g = 9,81\ m/s^2$	K_v = _____ N/m
4. Select an isolator by comparing calculated values with technical data for the desired load axis provided in tables for each isolator. a.) Calculated "W" must be less than the isolator's max static load and b.) Isolator's vibration stiffness must be less than the calculated maximum K_V		
PART III: SHOCK SIZING:		
1. Maximum Allowable Transmitted Acceleration:	A_T = _____G's	
2. Shock Input Velocity:	V = _____ m/s	
Free Fall Impact:	$V = \sqrt{2gh}$ $g = 9,81\ m/s^2$ h = Drop Height (m)	
3. Min. Isolator Response Deflection:	$D_{min} = \frac{V^2}{g(A_T)}$	D_{min} = _____m
4. Maximum Isolator Shock Stiffness:	$K_s = \frac{W(V/D_{min})^2}{g}$	K_s = _____N/m
5. Select an isolator by comparing calculated values with technical data for the desired load axis provided in tables for each isolator. a.) Calculated "W" must be less than the isolator's max static load and b.) Calculated D_{min} must be less than the isolator's max deflection Note: Metric deflections are calculated in meters (m) and technical data is in millimeters (mm). and c.) Isolator's shock stiffness must be less than calculated maximum "K_s"		
6. Check actual deflection using "K_s" from technical data to ensure that the isolator's max deflection is not exceeded.	$D_{actual} = \frac{V}{\sqrt{\frac{K_s(Isolator)g}{W}}}$	D_{actual} = _____m
7. If isolator's max deflection is exceeded, select another isolator and repeat steps 5 and 6.		

Compact Wire Rope Isolators
CR1 Series

Technical Data

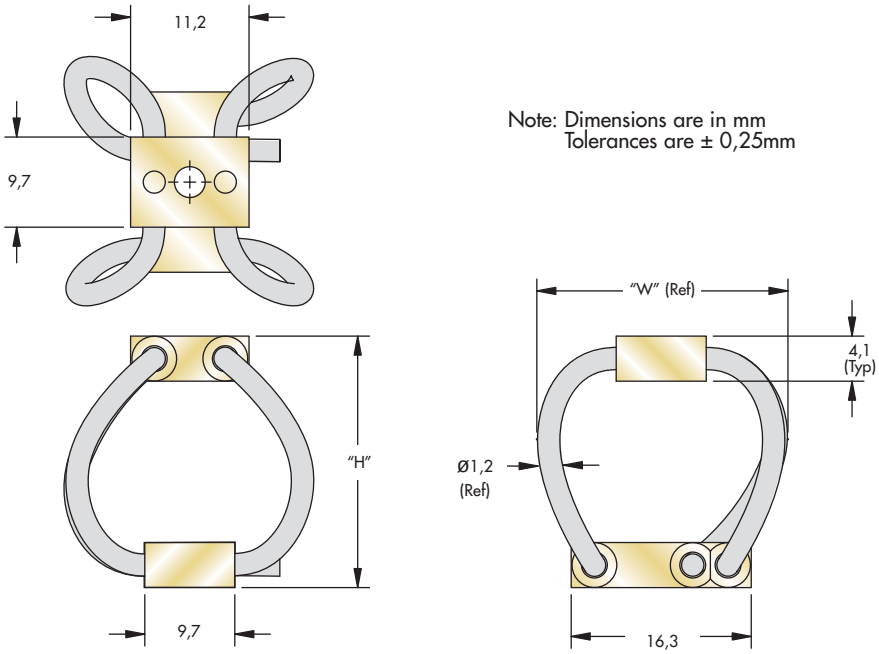

Note: Dimensions are in mm
Tolerances are ± 0,25mm

Size	Height "H" mm		Width Ref "W" mm	Unit Weight g	Mounting Options	Thru Hole mm	Thread	C'sink
CR1-100	17	± 1,52	19	3,1	A, B, C, D, E, S	Ø3,30	M3 X 0,5	90°
CR1-200	19		20	3,1				
CR1-300	23		23	3,4				
CR1-400	26		26	3,4				

Model Number Ordering Code

CR1 - 400 - D M

- M — Add "M" for Metric — For C'sink and Threaded Options
- D — Mounting Options: — See Chart
- 400 — Isolator Size: — See Sizing Table

Mounting Options

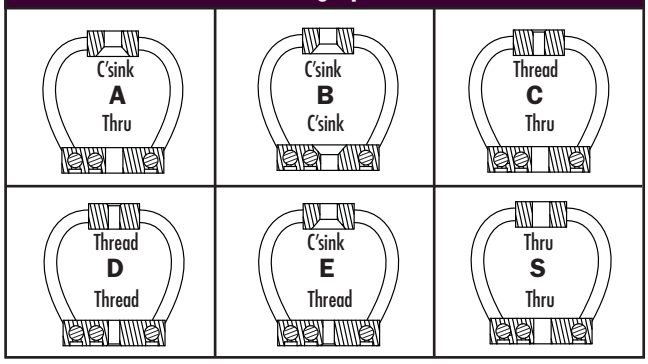

Wire Rope Special Options

Optional materials for the wire rope and mount bars are available upon request. Possibilities include galvanized rope, bell mouth mount bars or stainless steel rope and mount bars. Please contact ITT Enidine to discuss in more detail. Minimum purchase quantities may apply. See page 139.

- Maximum recommended torque for tapped aluminum bar is 1,2 Nm
- Wire Rope Material: Stranded 300 series stainless steel
- Operating Temperature Range: -100°C to 260°C
- U.S. Patent 6,290,217

ITT ENGINEERED FOR LIFE
www.enidine.eu Email: info@enidine.eu Tel.: +49 6063 9314 0 Fax: +49 6063 9314 44

Static
Load vs. Deflection

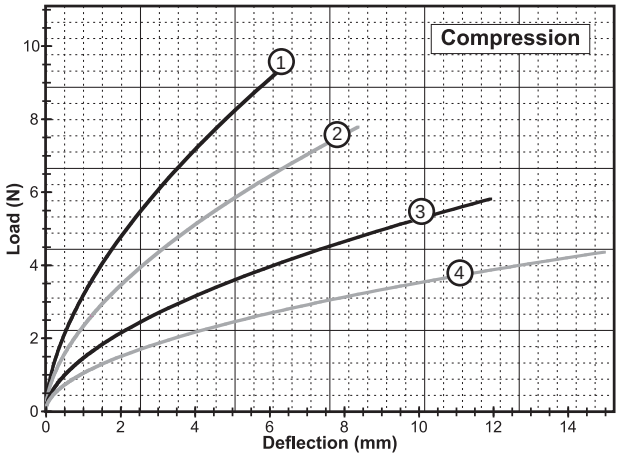

Compression

Curve	Model	Max Static Load N	Max Deflection mm	Kv (vibration) kN/m	Ks (shock) kN/m
1	CR1-100	3,3	6,4	3,9	1,9
2	CR1-200	2,4	8,4	2,8	1,2
3	CR1-300	1,8	11,9	1,75	0,61
4	CR1-400	1,3	15,0	1,31	0,39

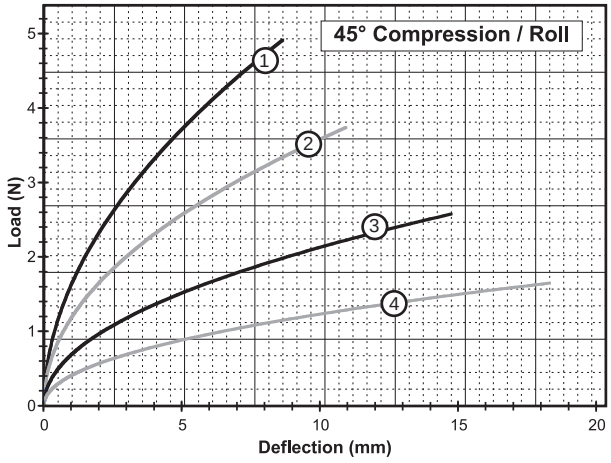

45° Compression/Roll

Curve	Model	Max Static Load N	Max Deflection mm	Kv (vibration) kN/m	Ks (shock) kN/m
1	CR1-100	1,6	8,6	2,1	0,79
2	CR1-200	1,1	10,9	1,5	0,44
3	CR1-300	0,76	14,7	0,88	0,26
4	CR1-400	0,49	18,3	0,53	0,12

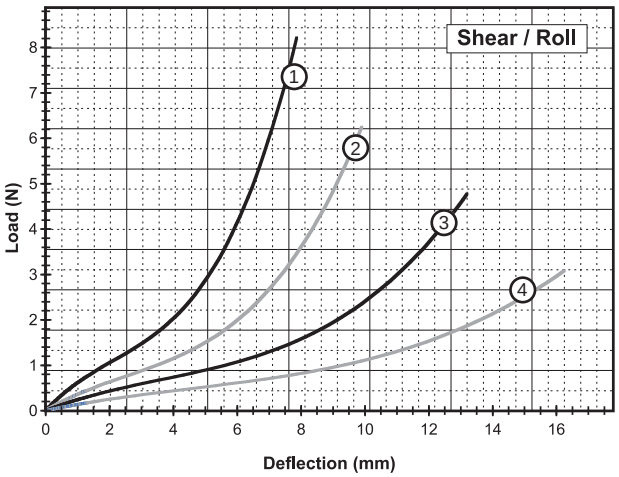

Shear/Roll

Curve	Model	Max Static Load N	Max Deflection mm	Kv (vibration) kN/m	Ks (shock) kN/m
1	CR1-100	1,1	7,9	0,70	0,70
2	CR1-200	0,89	9,9	0,44	0,44
3	CR1-300	0,71	13,2	0,26	0,26
4	CR1-400	0,53	16,3	0,13	0,13

Note: Do not extrapolate plotted curves.

Compact Wire Rope Isolators
CR2 Series

Technical Data

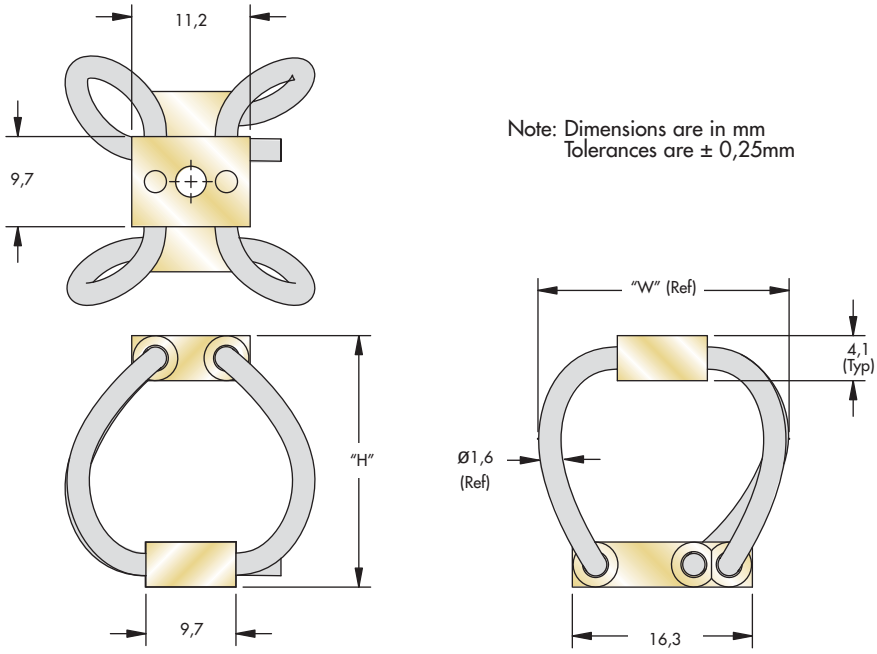

Note: Dimensions are in mm
Tolerances are ± 0,25mm

Size	Height "H" mm		Width Ref "W" mm	Unit Weight g	Mounting Options	Thru Hole mm	Thread mm	C'sink
CR2-100	16	± 1,52	20	3,7	A, B, C, D, E, S	Ø3,30	M3 X 0,5	90°
CR2-200	19		21	4,0				
CR2-300	23		24	4,3				
CR2-400	27		27	4,5				

Model Number Ordering Code

CR2 - 400 - D M

- M — Add "M" for Metric — For C'sink and Threaded Options
- D — Mounting Options: — See Chart
- 400 — Isolator Size: — See Sizing Table

Mounting Options

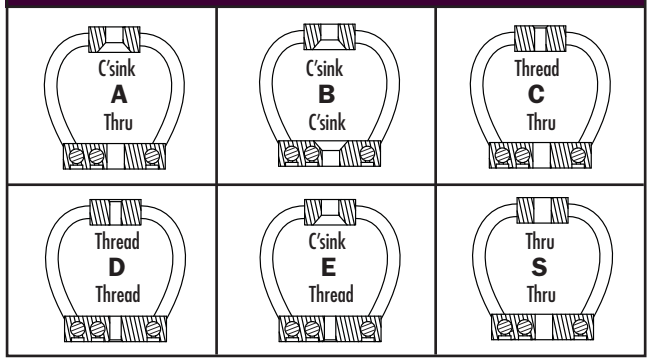

Wire Rope Special Options

Optional materials for the wire rope and mount bars are available upon request. Possibilities include galvanized rope, bell mouth mount bars or stainless steel rope and mount bars. Please contact ITT Enidine to discuss in more detail. Minimum purchase quantities may apply. See page 139.

- Maximum recommended torque for tapped aluminum bar is 1,2 Nm
- Wire Rope Material: Stranded 300 series stainless steel
- Operating Temperature Range: -100°C to 260°C
- U.S. Patent 6,290,217

ITT ENGINEERED FOR LIFE
www.enidine.eu Email: info@enidine.eu Tel.: +49 6063 9314 0 Fax: +49 6063 9314 44

Static
Load vs. Deflection

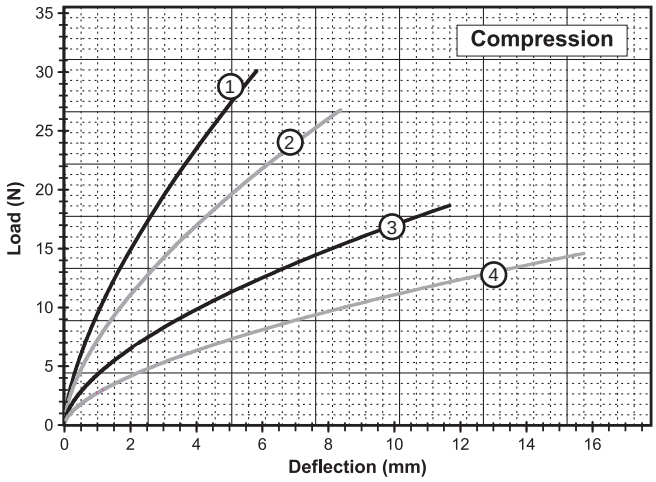

Compression

Curve	Model	Max Static Load N	Max Deflection mm	Kv (vibration) kN/m	Ks (shock) kN/m
1	CR2-100	12	5,8	11	6,1
2	CR2-200	9,3	8,4	8,8	4,0
3	CR2-300	6,7	11,7	5,3	1,9
4	CR2-400	4,9	15,7	3,5	1,2

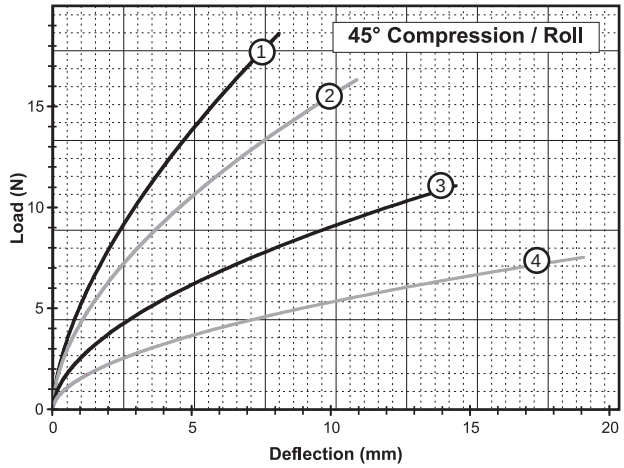

45° Compression/Roll

Curve	Model	Max Static Load N	Max Deflection mm	Kv (vibration) kN/m	Ks (shock) kN/m
1	CR2-100	5,8	8,1	6,1	2,8
2	CR2-200	4,9	10,9	5,3	1,9
3	CR2-300	3,3	14,5	3,2	1,0
4	CR2-400	2,2	19,1	1,9	0,51

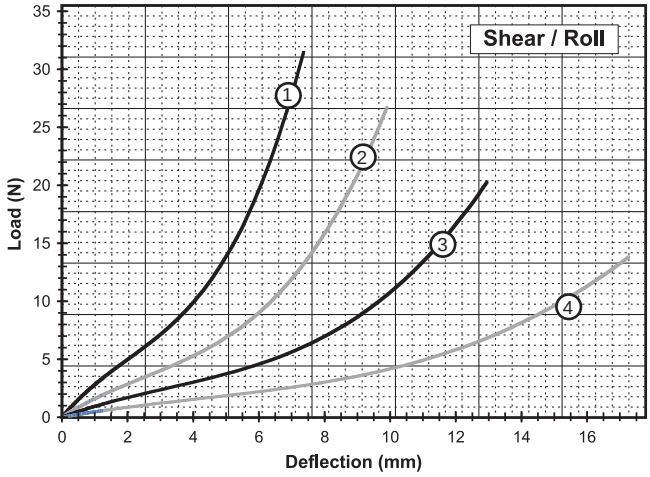

Shear/Roll

Curve	Model	Max Static Load N	Max Deflection mm	Kv (vibration) kN/m	Ks (shock) kN/m
1	CR2-100	5,6	7,4	3,0	3,0
2	CR2-200	4,0	9,9	1,8	1,8
3	CR2-300	2,9	13,0	1,1	1,1
4	CR2-400	2,0	17,3	0,53	0,53

Note: Do not extrapolate plotted curves.

Compact Wire Rope Isolators
CR3 Series

Technical Data

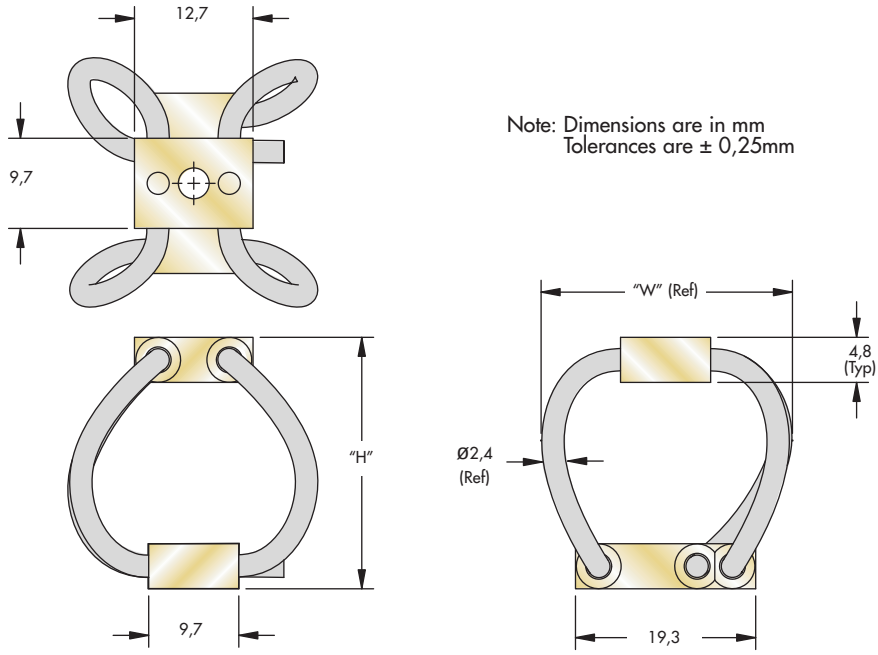

Note: Dimensions are in mm
Tolerances are ± 0,25mm

Size	Height "H" mm		Width Ref "W" mm	Unit Weight g	Mounting Options	Thru Hole mm	Thread mm	C'sink
CR3-100	19	± 1,52	22	5,7	A, B, C, D, E, S	Ø3,30	M3 X 0,5	90°
CR3-200	23		24	6,2				
CR3-300	27		27	6,8				
CR3-400	33		30	7,4				

Model Number Ordering Code

CR3 - 400 - D M

- M — Add "M" for Metric — For C'sink and Threaded Options
- D — Mounting Options: — See Chart
- 400 — Isolator Size: — See Sizing Table

Mounting Options

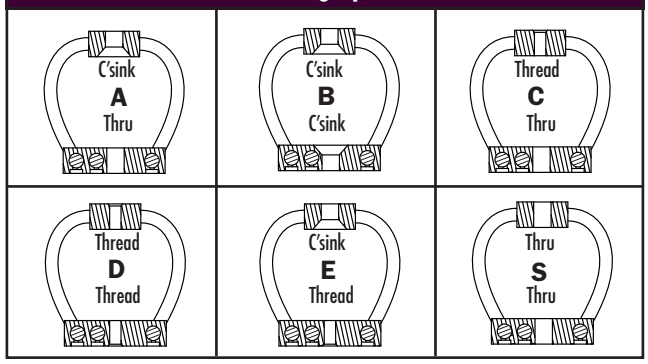

Wire Rope Special Options

Optional materials for the wire rope and mount bars are available upon request. Possibilities include galvanized rope, bell mouth mount bars or stainless steel rope and mount bars. Please contact ITT Enidine to discuss in more detail. Minimum purchase quantities may apply. See page 139.

- Maximum recommended torque for tapped aluminum bar is 1,5 Nm
- Wire Rope Material: Stranded 300 series stainless steel
- Operating Temperature Range: -100°C to 260°C
- U.S. Patent 6,290,217

ITT ENGINEERED FOR LIFE
www.enidine.eu Email: info@enidine.eu Tel.: +49 6063 9314 0 Fax: +49 6063 9314 44

Static
Load vs. Deflection

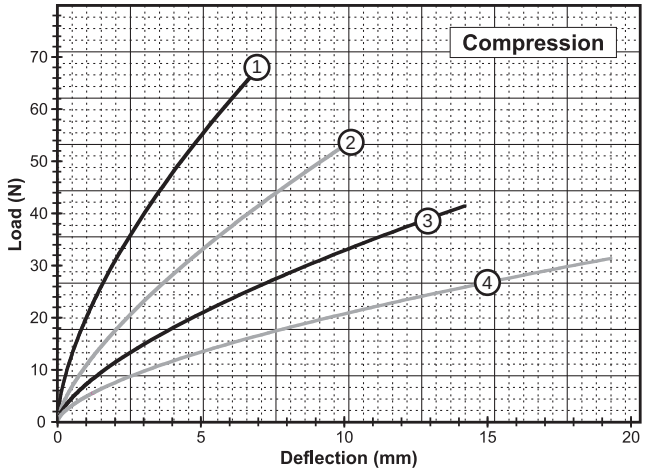

Compression

Curve	Model	Max Static Load N	Max Deflection mm	Kv (vibration) kN/m	Ks (shock) kN/m
1	CR3-100	29	7,1	24	12
2	CR3-200	22	10,4	12	6,1
3	CR3-300	18	14,2	8,4	3,5
4	CR3-400	11	19,3	5,8	1,9

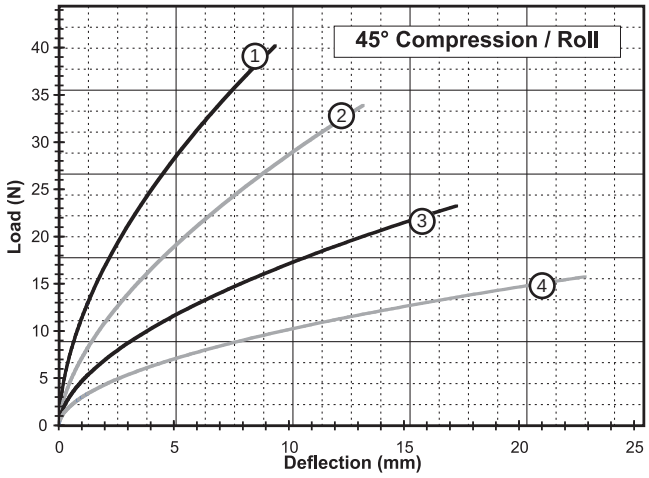

45° Compression/Roll

Curve	Model	Max Static Load N	Max Deflection mm	Kv (vibration) kN/m	Ks (shock) kN/m
1	CR3-100	12	9,4	14	5,3
2	CR3-200	10	13,2	8,8	3,2
3	CR3-300	6,7	17,3	5,8	1,8
4	CR3-400	4,4	22,9	3,5	0,91

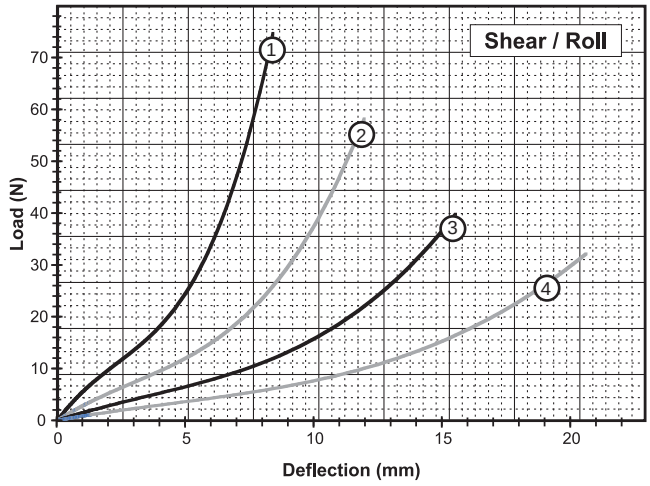

Shear/Roll

Curve	Model	Max Static Load N	Max Deflection mm	Kv (vibration) kN/m	Ks (shock) kN/m
1	CR3-100	12	8,4	6,1	6,1
2	CR3-200	8,5	11,9	3,5	3,5
3	CR3-300	6,2	15,5	1,8	1,8
4	CR3-400	4,4	20,6	1,1	1,1

Note: Do not extrapolate plotted curves.

Compact Wire Rope Isolators
CR4 Series

Technical Data

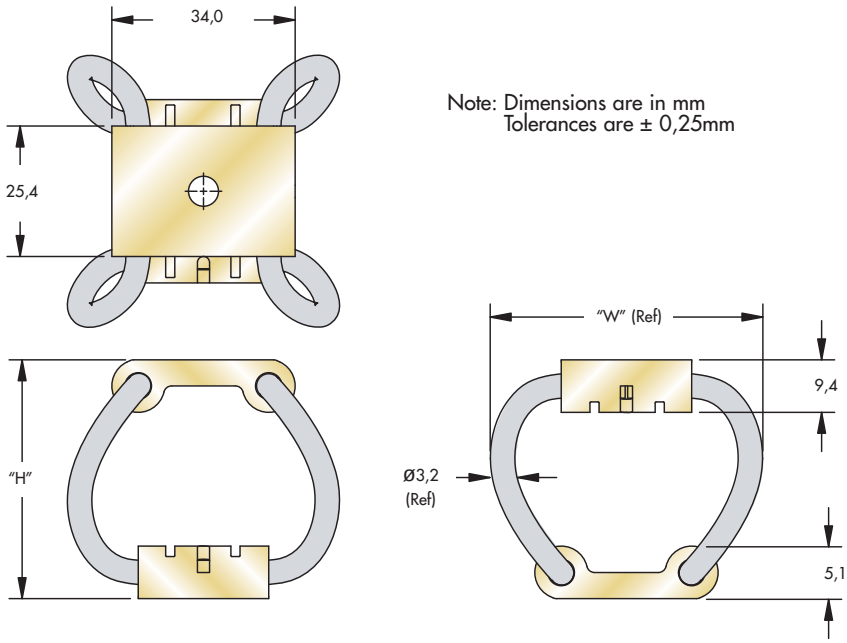

Note: Dimensions are in mm
Tolerances are ± 0,25mm

Size	Height "H" mm		Width Ref "W" mm	Unit Weight g	Mounting Options	Thru Hole mm	Thread mm	C'sink
CR4-100	42	± 1,52	47	40	A, B, C, D, E, S	Ø7,00	M6 X 1,0	90°
CR4-200	53		54	40				
CR4-300	60		59	43				
CR4-400	75		68	48				

Model Number Ordering Code

CR4 - 400 - D M

- M — Add "M" for Metric — All Mounting Options
- D — Mounting Options: — See Chart
- 400 — Isolator Size: — See Sizing Table

Mounting Options

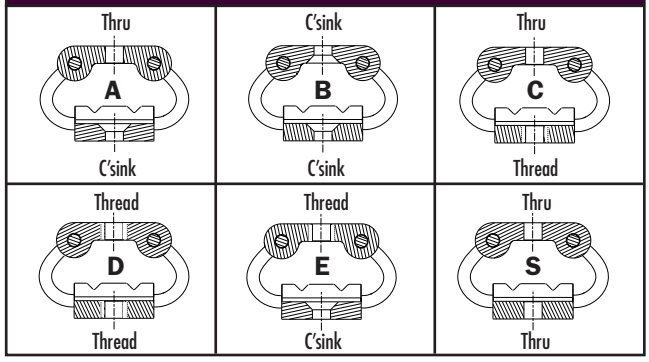

Wire Rope Special Options

Optional materials for the wire rope and mount bars are available upon request. Possibilities include galvanized rope, bell mouth mount bars or stainless steel rope and mount bars. Please contact ITT Enidine to discuss in more detail. Minimum purchase quantities may apply. See page 139.

- Maximum recommended torque for tapped aluminum bar is 7,5 Nm
- Wire Rope Material: Stranded 300 series stainless steel
- Operating Temperature Range: -100°C to 260°C
- U.S. Patent 6,244,579

ITT ENGINEERED FOR LIFE
www.enidine.eu Email: info@enidine.eu Tel.: +49 6063 9314 0 Fax: +49 6063 9314 44

Static
Load vs. Deflection

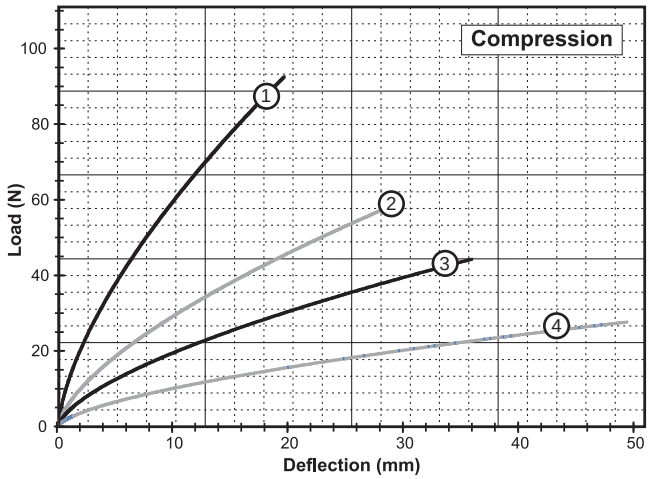

Compression

Curve	Model	Max Static Load N	Max Deflection mm	Kv (vibration) kN/m	Ks (shock) kN/m
1	CR4-100	24	19,6	12	5,8
2	CR4-200	18	29,7	6,0	2,5
3	CR4-300	13	35,8	4,4	1,6
4	CR4-400	6.7	49,3	2,2	0,70

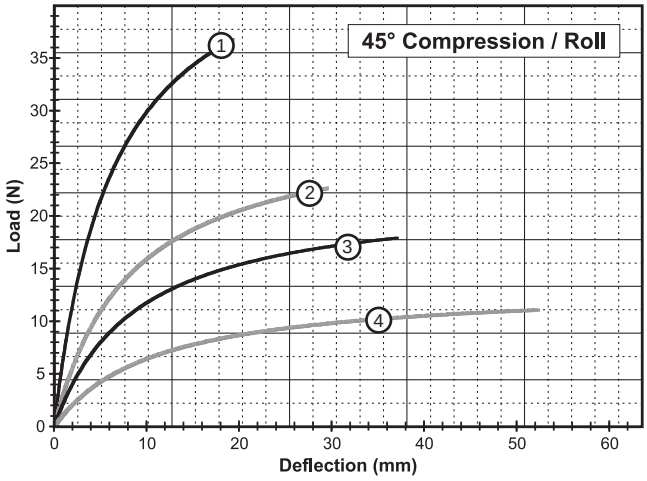

45° Compression/Roll

Curve	Model	Max Static Load N	Max Deflection mm	Kv (vibration) kN/m	Ks (shock) kN/m
1	CR4-100	11	19,3	6,4	2,8
2	CR4-200	6,7	29,5	3,1	1,1
3	CR4-300	5,3	37,1	2,2	0,70
4	CR4-400	3,6	52,3	1,1	0,35

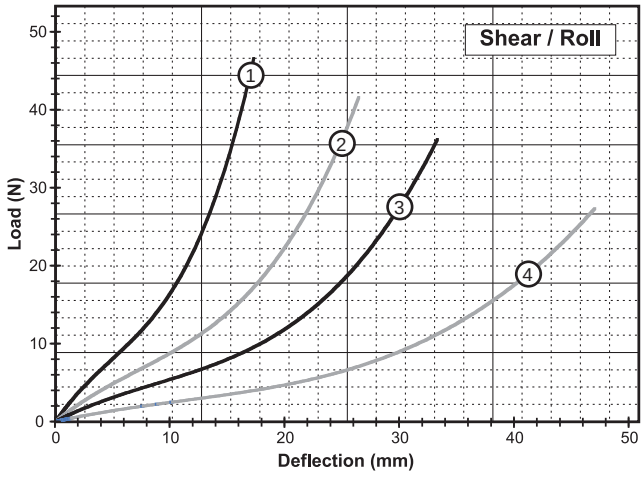

Shear/Roll

Curve	Model	Max Static Load N	Max Deflection mm	Kv (vibration) kN/m	Ks (shock) kN/m
1	CR4-100	8,5	17,3	1,9	1,9
2	CR4-200	7,1	26,4	1,1	1,1
3	CR4-300	5,3	33,3	0,70	0,70
4	CR4-400	3,3	47,0	0,35	0,35

Note: Do not extrapolate plotted curves.

Compact Wire Rope Isolators
CR5 Series

Technical Data

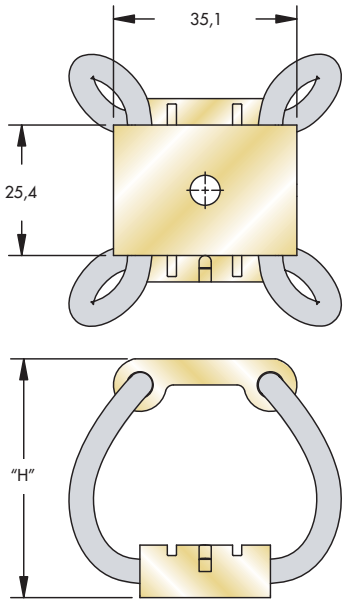

Note: Dimensions are in mm
Tolerances are ± 0,25mm

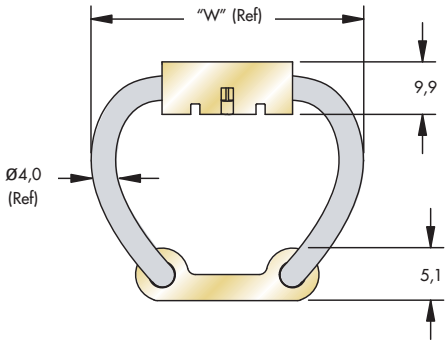

Size	Height "H" mm		Width Ref "W" mm	Unit Weight g	Mounting Options	Thru Hole mm	Thread mm	C'sink
CR5-100	41	± 1,52	48	45	A, B, C, D, E, S	Ø7,00	M6 X 1,0	90°
CR5-200	53		54	48				
CR5-300	60		59	51				
CR5-400	76		67	57				

Model Number Ordering Code

CR5 - 400 - D M

- M — Add "M" for Metric — All Mounting Options
- D — Mounting Options: — See Chart
- 400 — Isolator Size: — See Sizing Table

Mounting Options

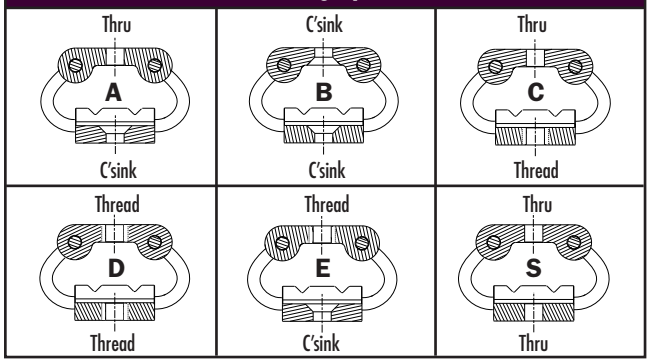

Wire Rope Special Options

Optional materials for the wire rope and mount bars are available upon request. Possibilities include galvanized rope, bell mouth mount bars or stainless steel rope and mount bars. Please contact ITT Enidine to discuss in more detail. Minimum purchase quantities may apply. See page 139.

- Maximum recommended torque for tapped aluminum bar is 7,5 Nm
- Wire Rope Material: Stranded 300 series stainless steel
- Operating Temperature Range: -100°C to 260°C
- U.S. Patent 6,244,579

ITT ENGINEERED FOR LIFE
www.enidine.eu Email: info@enidine.eu Tel.: +49 6063 9314 0 Fax: +49 6063 9314 44

Static
Load vs. Deflection

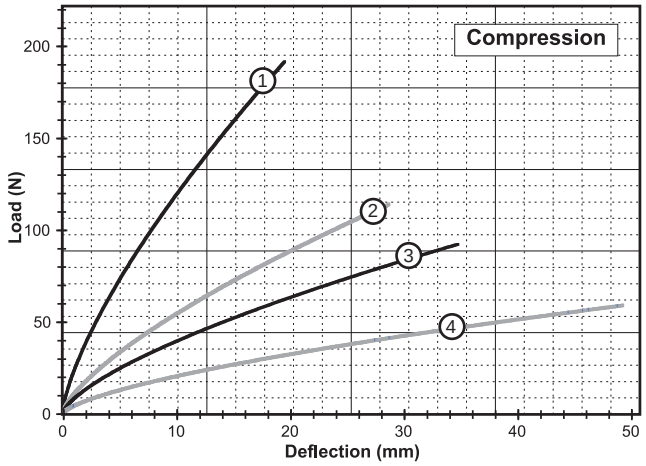

Compression

Curve	Model	Max Static Load N	Max Deflection mm	Kv (vibration) kN/m	Ks (shock) kN/m
1	CR5-100	80	19,6	22	11
2	CR5-200	38	28,7	11	4,4
3	CR5-300	27	34,8	7,9	3,2
4	CR5-400	16	49,3	4,4	1,4

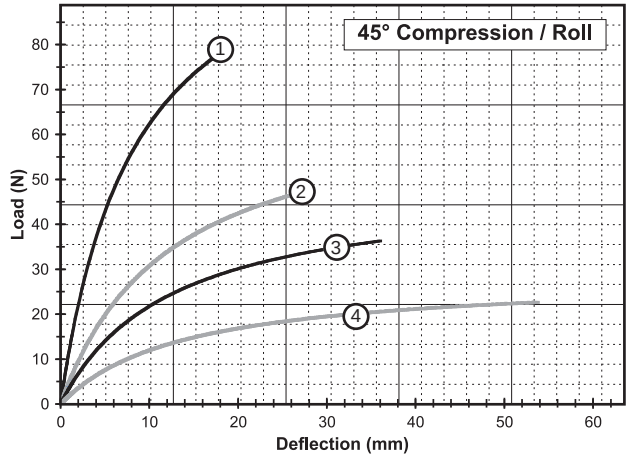

45° Compression/Roll

Curve	Model	Max Static Load N	Max Deflection mm	Kv (vibration) kN/m	Ks (shock) kN/m
1	CR5-100	24	18,3	12	6,1
2	CR5-200	13	28,4	5,3	2,3
3	CR5-300	11	36,1	3,6	1,4
4	CR5-400	6,7	53,8	1,9	0,70

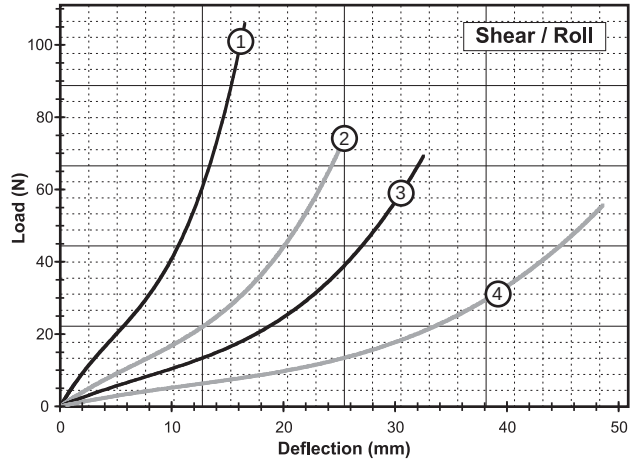

Shear/Roll

Curve	Model	Max Static Load N	Max Deflection mm	Kv (vibration) kN/m	Ks (shock) kN/m
1	CR5-100	20	16,5	25 4,4	4,4
2	CR5-200	13	25,7	12 2,1	2,1
3	CR5-300	11	32,5	8 1,4	1,4
4	CR5-400	6,7	48,5	0,70	0,70

Note: Do not extrapolate plotted curves.

Compact Wire Rope Isolators
CR6 Series

Technical Data

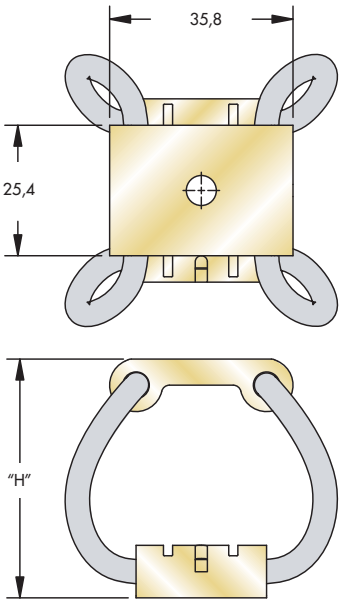

Note: Dimensions are in mm
Tolerances are ± 0,25mm

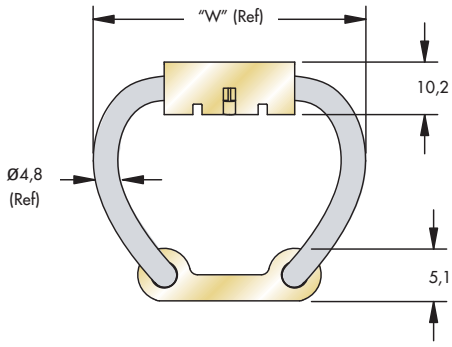

Size	Height "H" mm		Width Ref "W" mm	Unit Weight g	Mounting Options	Thru Hole mm	Thread mm	C'sink
CR6-100	47	± 1,52	54	57	A, B, C, D, E, S	Ø7,00	M6 X 1,0	90°
CR6-200	55		59	62				
CR6-300	64		64	65				
CR6-400	79		73	74				

Model Number Ordering Code

CR6 - 400 - D M

- M — Add "M" for Metric — All Mounting Options
- D — Mounting Options: — See Chart
- 400 — Isolator Size: — See Sizing Table

Mounting Options

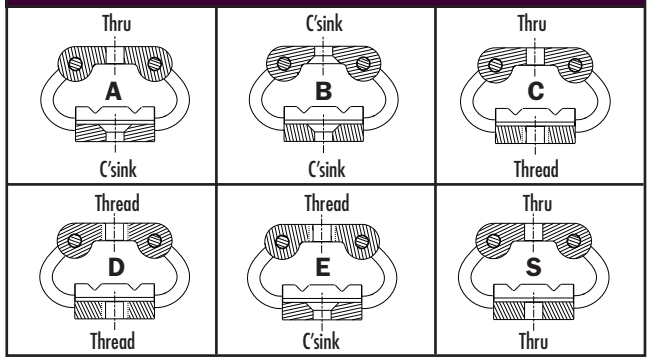

Wire Rope Special Options

Optional materials for the wire rope and mount bars are available upon request. Possibilities include galvanized rope, bell mouth mount bars or stainless steel rope and mount bars. Please contact ITT Enidine to discuss in more detail. Minimum purchase quantities may apply. See page 139.

- Maximum recommended torque for tapped aluminum bar is 7,5 Nm
- Wire Rope Material: Stranded 300 series stainless steel
- Operating Temperature Range: -100°C to 260°C
- U.S. Patent 6,244,579

ITT ENGINEERED FOR LIFE
www.enidine.eu Email: info@enidine.eu Tel.: +49 6063 9314 0 Fax: +49 6063 9314 44

Static
Load vs. Deflection

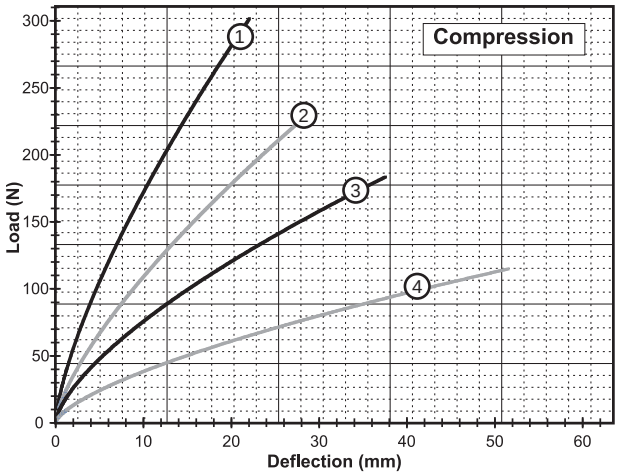

Compression

Curve	Model	Max Static Load N	Max Deflection mm	Kv (vibration) kN/m	Ks (shock) kN/m
1	CR6-100	142	22,1	32	16
2	CR6-200	93	29,5	20	9,6
3	CR6-300	67	37.6	15	5,3
4	CR6-400	36	51,6	7,9	2,6

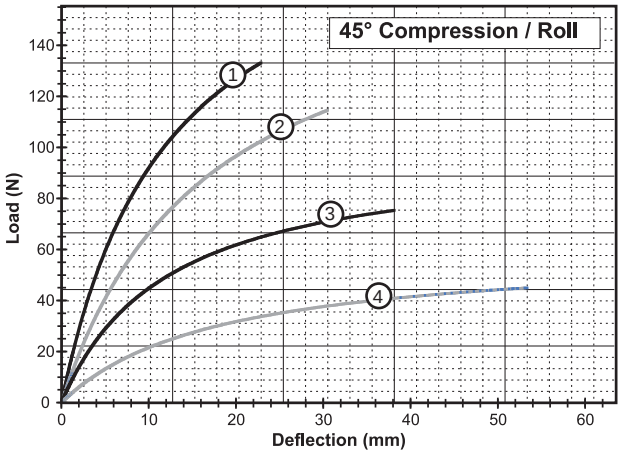

45° Compression/Roll

Curve	Model	Max Static Load N	Max Deflection mm	Kv (vibration) kN/m	Ks (shock) kN/m
1	CR6-100	40	22,9	16	7,9
2	CR6-200	33	30,5	9,6	5,3
3	CR6-300	22	38,1	7,9	2,8
4	CR6-400	13	53,3	3,5	1,2

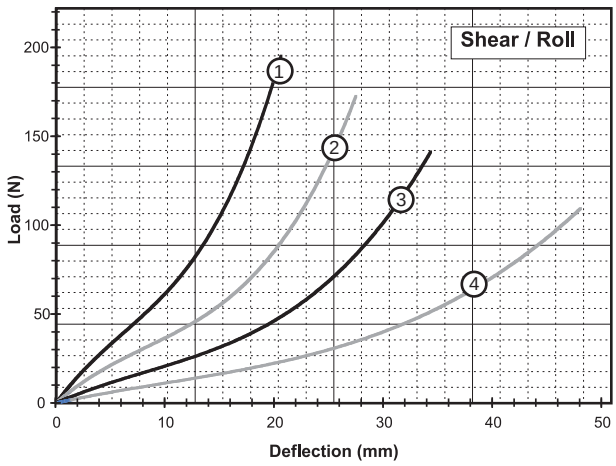

Shear/Roll

Curve	Model	Max Static Load N	Max Deflection mm	Kv (vibration) kN/m	Ks (shock) kN/m
1	CR6-100	40	20,6	7,9	7,9
2	CR6-200	31	27,4	4,4	4,4
3	CR6-300	22	34,3	2,6	2,6
4	CR6-400	16	48,0	1,6	1,6

Note: Do not extrapolate plotted curves.

HERM (High Energy Rope Mount)

HR6-HR40 Series

Overview

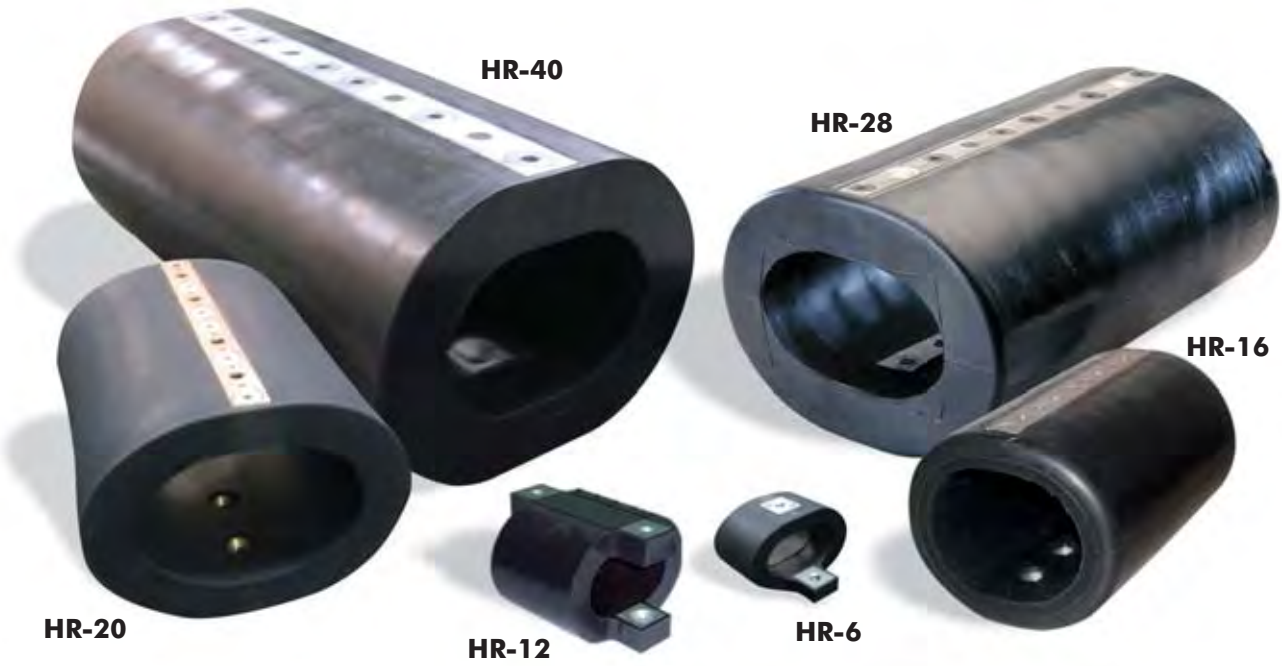

The **HERM** isolator incorporates the use of a traditional ITT Enidine helical wire rope isolator encased in a proprietary elastomeric compound. The stainless steel cable of the mount provides for a rugged construction, while the elastomer provides additional damping and stiffness. This unique design results in a fail safe mount with a higher stiffness and energy absorption capacity.

The mount is readily scalable and performance easily tuned by varying the wire diameter, loop size, number of loops and elastomeric properties. The HERM isolator has proven particularly strong in low natural frequency "soft deck" applications of 12-16 Hz, reducing output G's to below 15G's. Its sealed nature of construction also provides for easy NBC washdown. Since the mounting size of the HERM isolator is virtually identical to that of standard wire rope isolators used in many shipboard applications, equipment upgrades are both simple and seamless with drop-in replacement capability.

ITT ENGINEERED FOR LIFE
www.enidine.eu Email: info@enidine.eu Tel.: +49 6063 9314 0 Fax: +49 6063 9314 44

Overview

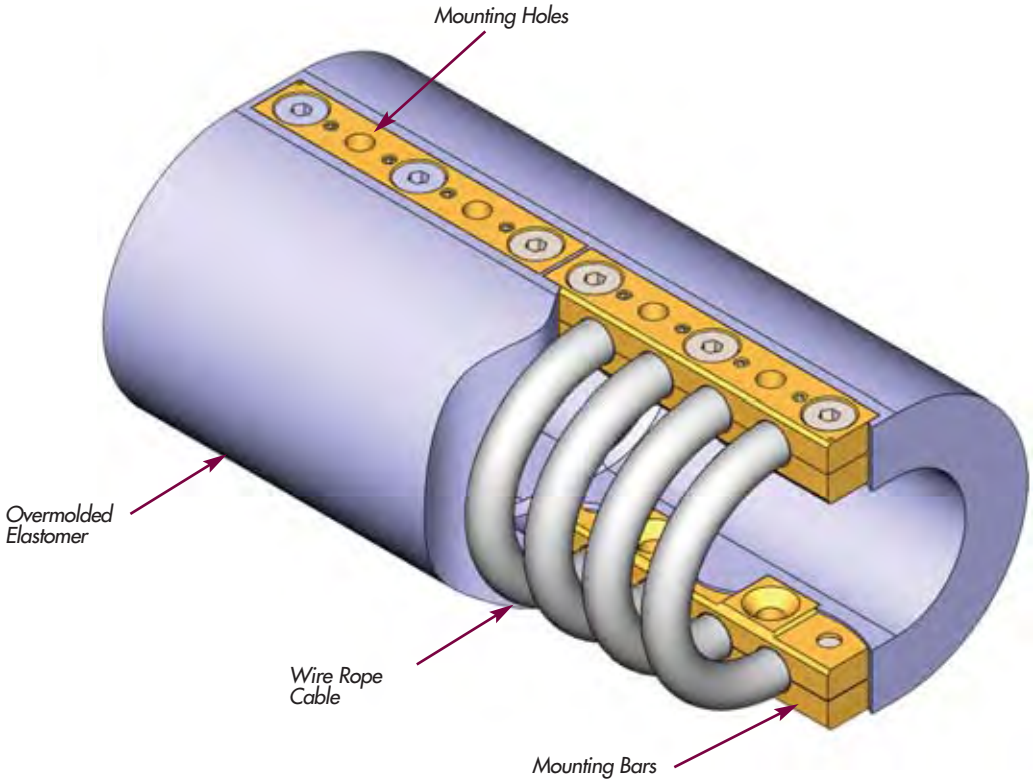

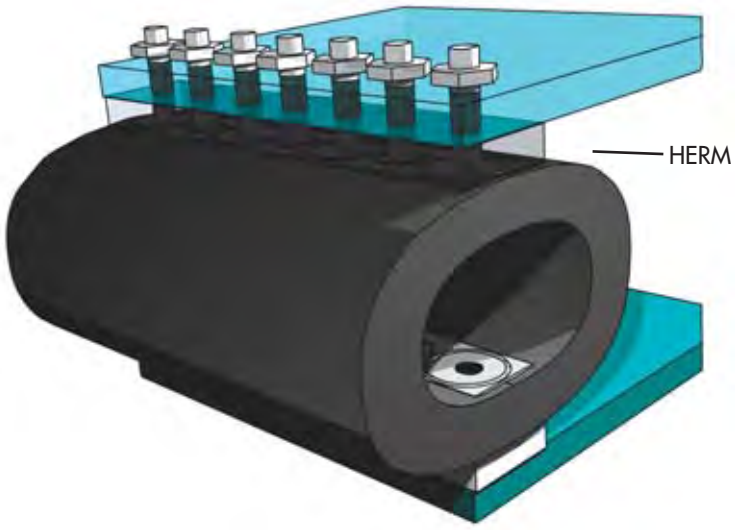

HERM Features:

- A variety of material combinations available
- Mounting identical to traditional Wire Rope Isolators
- Readily "tunable" to meet a wide range of natural frequencies
- Greater load carrying capability

HERM Benefits:

- Easy retrofit on fielded equipment
- Fewer mounts required to support a given load
- Smaller "footprint" than other mounts
- Compatible with NBC wash down requirements
- Improved noise attenuation compared to standard Wire Rope Isolators

HERM (High Energy Rope Mount)
HR Series

Overview

Materials and Finishes:

Standard: Elastomer: Proprietary ITT Enidine Compound
Wire Rope: 302/304 Stainless Steel
Mount Bars: 6061-T6 Aluminum, Chemical Conversion Coated per MIL-C-5541, Class 1A (RoHS Compliant)
Hardware: Alloy Steel per ASTM F835, Zinc Plated (HR16, HR20, HR28 and HR40)

Optional: Mount Bars: 6061-T6 Aluminum, Anodized per MIL-A-8625, Type II, Class 1 (RoHS Compliant)
302/304 Stainless Steel per ASTM A276, Passivated
Hardware: 302/304 Stainless Steel (when stainless steel Bars are specified)

Special: Consult ITT Enidine

Isolator Options:

Mounting: ITT Enidine offers various mounting combinations of thru-hole, countersunk, and threaded bars depending upon the HERM model selected.
Consult ITT Enidine if a preferred mounting configuration is not listed.

Performance:

Stiffness (Kv or Ks):
HERM's exhibit non-linear stiffness behavior. Small deflections, usually associated with vibration isolation, will have a different spring rate than larger shock deflections. ITT Enidine publishes typical vibration stiffness values (Kv), and average shock stiffness values (Ks) within the catalog. These values can be used with the provided equations listed on Page 156 to predict system performance.

Isolator Axes:
HERM are multi-axis isolators. The diagram below includes load axis definitions and deflection considerations.

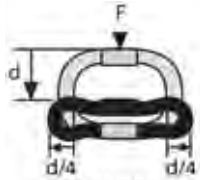

COMPRESSION

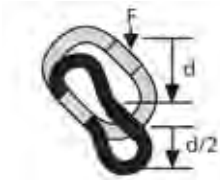

45º COMPRESSION/ROLL

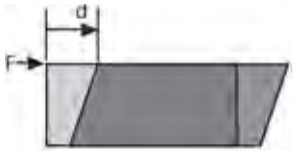

FIXED SHEAR

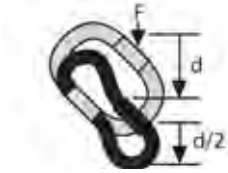

FIXED ROLL

Damping: Typically 15-25%, depending on size and input level. For specific damping considerations, please consult ITT Enidine.

Mounting Orientation:
The diagrams below illustrate typical mounting orientations.

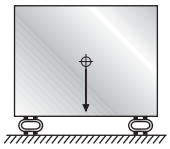
COMPRESSION

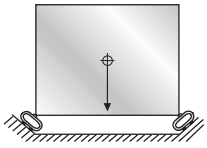
45º COMPRESSION/ROLL

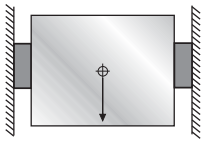
FIXED SHEAR

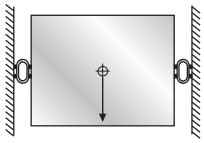
FIXED ROLL

Stabilizers:
Stabilizers are used to control deflections of tall supported masses. Stabilizers are typically recommended when the height equals 2-times the width or depth dimension.

ITT ENGINEERED FOR LIFE
www.enidine.eu Email: info@enidine.eu Tel.: +49 6063 9314 0 Fax: +49 6063 9314 44

Application Worksheet

APPLICATION WORKSHEET - INPUTS METRIC

	METRIC
PART I: SYSTEM DATA:	
1. Total Supported Load (W_T): W_T = _____ Kg x 9,81 = _____ N	
2. Number of Isolators (n): n = _____	
3. Static Load per Isolator (W): $W = \frac{W_T}{n}$	W = _____ N*
* Assumes a central CG	
4. Load Axis: Compression Shear or Roll 45° Compression/Roll	Load Axis _____
PART II: VIBRATION SIZING:	
1. Input Excitation Frequency f_i = _____ Hz $\left(= \frac{rpm}{60}\right)$	
2. System Response Natural Frequency for 80% isolation: $f_n = \frac{f_i}{3,0}$ = _____Hz	
3. Maximum Isolator Vibration Stiffness: (K_v) $K_v = \frac{W(2\pi f_n)^2}{g}$ $g = 9,81\ m/s^2$	K_v = _____ N/m
4. Select an isolator by comparing calculated values with technical data for the desired load axis provided in tables for each isolator. a.) Calculated "W" must be less than the isolator's max static load and b.) Isolator's vibration stiffness must be less than the calculated maximum K_v	
PART III: SHOCK SIZING:	
1. Maximum Allowable Transmitted Acceleration: A_T = _____G's	
2. Shock Input Velocity: V = _____ m/s Free Fall Impact: $V = \sqrt{2gh}$ $g = 9,81\ m/s^2$ h = Drop Height (m)	
3. Min. Isolator Response Deflection: $D_{min} = \frac{V^2}{g(A_T)}$	D_{min} = _____m
4. Maximum Isolator Shock Stiffness: $K_s = \frac{W(V/D_{min})^2}{g}$	K_s = _____N/m
5. Select an isolator by comparing calculated values with technical data for the desired load axis provided in tables for each isolator. a.) Calculated "W" must be less than the isolator's max static load and b.) Calculated D_{min} must be less than the isolator's max deflection Note: Metric deflections are calculated in meters (m) and technical data is in millimeters (mm). and c.) Isolator's shock stiffness must be less than calculated maximum "K_s"	
6. Check actual deflection using "K_s" from technical data to ensure that the isolator's max deflection is not exceeded. $D_{actual} = \frac{V}{\sqrt{\frac{K_s(Isolator)g}{W}}}$	D_{actual} = _____m
7. If isolator's max deflection is exceeded, select another isolator and repeat steps 5 and 6.	

HERM (High Energy Rope Mount)
HR6 Series

Technical Data

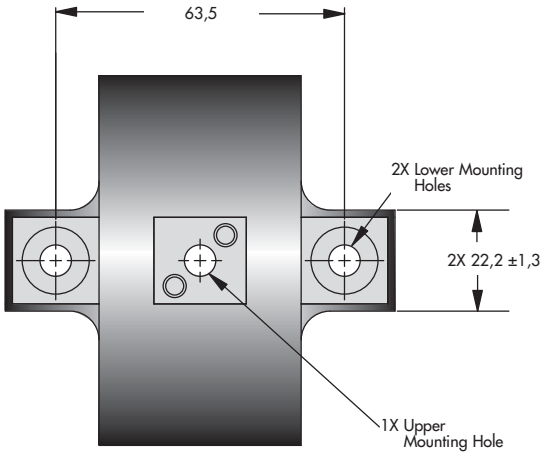

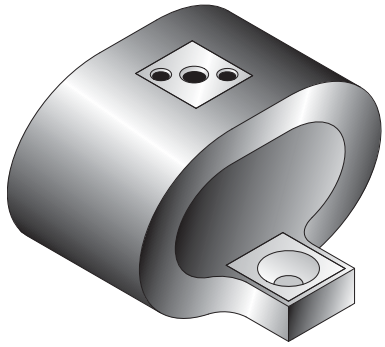

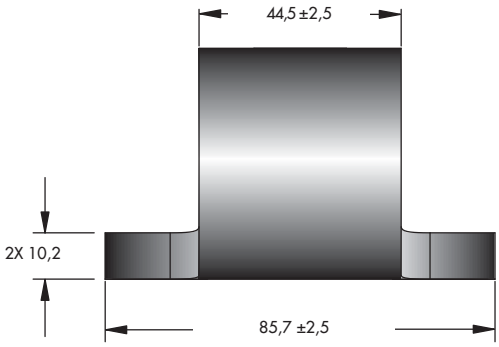

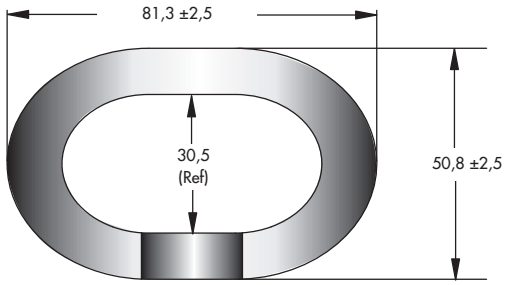

Note: Dimensions are in mm Tolerances are ± 0,25mm

Size	Unit Weight Kg	Mounting Options	Thru Hole mm	Thread mm	C'sink
HR6-600	0,2	B, D, E, F	Ø6,9	M6 X 1,0	90°
HR6-400	0,2				
HR6-200	0,2				

Model Number Ordering Code

HR6 - 200 - B L M

- M — Add "M" for Metric — All Mounting Options
- L — Threaded Hole Options: [L] - Helical, Locking, Dry Film Lubricated; [H] - Helical, Free Running
- B — Mounting Options: See Chart
- 200 — Isolator Model: See Sizing Table

Mounting Options

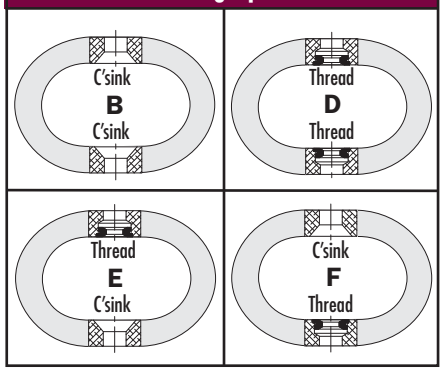

Wire Rope Special Options

Optional materials for the wire rope and mount bars are available upon request. Possibilities include galvanized rope, bell mouth mount bars or stainless steel rope and mount bars. Please contact ITT Enidine to discuss in more detail. Minimum purchase quantities may apply. See page 155.

- Meets environmental requirements of MIL-M-17185A

ITT ENGINEERED FOR LIFE
www.enidine.eu Email: info@enidine.eu Tel.: +49 6063 9314 0 Fax: +49 6063 9314 44

HERM (High Energy Rope Mount)
HR6 Series

Technical Data

Static
Load vs. Deflection

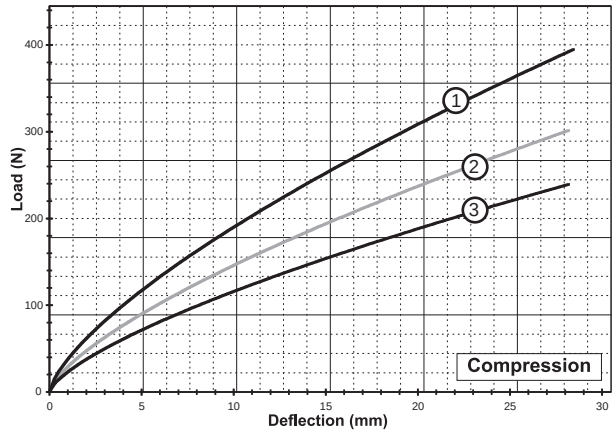

Compression

Curve	Model	Max Static Load N	Max Deflection mm	Kv (vibration) kN/m	Ks (shock) kN/m
1	HR6-600	107	28,4	38	25
2	HR6-400	80	28,4	29	19
3	HR6-200	62	28,4	23	15

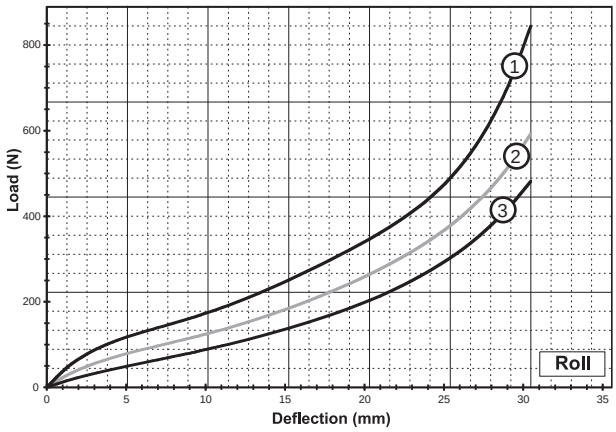

Roll

Curve	Model	Max Static Load N	Max Deflection mm	Kv (vibration) kN/m	Ks (shock) kN/m
1	HR6-600	160	30,5	40	29
2	HR6-400	116	30,5	25	22
3	HR6-200	80	30,5	14	17

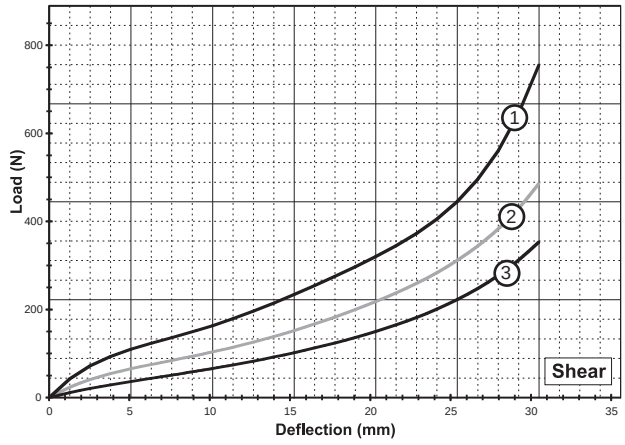

Shear

Curve	Model	Max Static Load N	Max Deflection mm	Kv (vibration) kN/m	Ks (shock) kN/m
1	HR6-600	151	30,5	37	26
2	HR6-400	89	30,5	21	18
3	HR6-200	58	30,5	11	12

Note: Do not extrapolate plotted curves.

HERM (High Energy Rope Mount)
HR8 Series

Technical Data

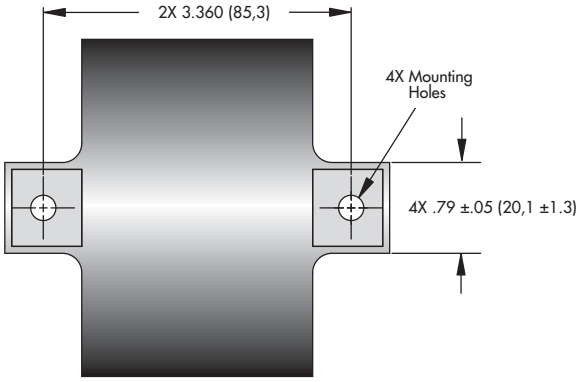

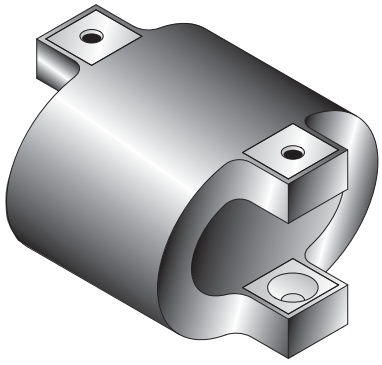

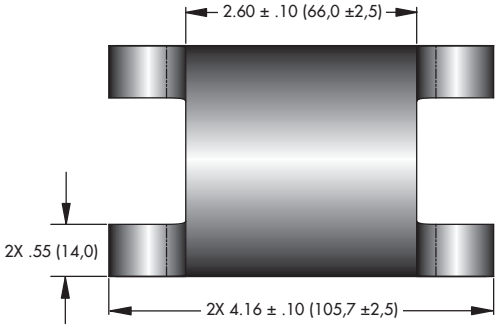

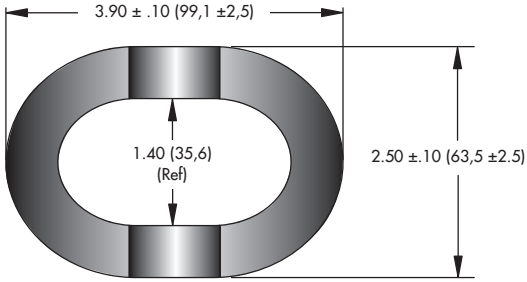

Note: Dimensions are in inches (mm) Tolerances are ± 0,010 (± 0,25mm)

Size	Unit Weight lbs. (Kg)	Mounting Options	Thru Hole mm	Thread mm	C'sink
HR8-600	0,4	B, D, E	6,9 ±0,13	M6 X 1,0	90°
HR8-400	0,4				
HR8-200	0,4				

Model Number Ordering Code

HR8 -200 - B L M

- M — Add "M" for Metric — All Mounting Options
- L — Threaded Hole Options: [L] - Helical, Locking, Dry Film Lubricated; [H] - Helical, Free Running
- B — Mounting Options: See Chart
- 200 — Isolator Model: See Sizing Table

Mounting Options

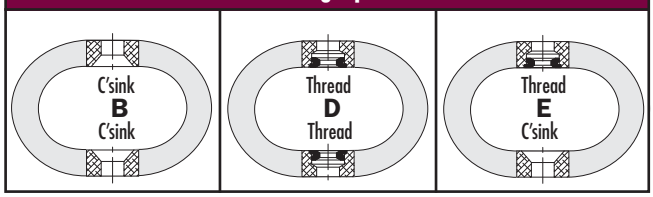

- Meets environmental requirements of MIL-M-17185A

Wire Rope Special Options

Optional materials for the wire rope and mount bars are available upon request. Possibilities include galvanized rope, bell mouth mount bars or stainless steel rope and mount bars. Please contact ITT Enidine to discuss in more detail. Minimum purchase quantities may apply. See page 155.

ITT ENGINEERED FOR LIFE
www.enidine.eu Email: info@enidine.eu Tel.: +49 6063 9314 0 Fax: +49 6063 9314 44

HERM (High Energy Rope Mount)
HR8 Series

Technical Data

Static
Load vs. Deflection

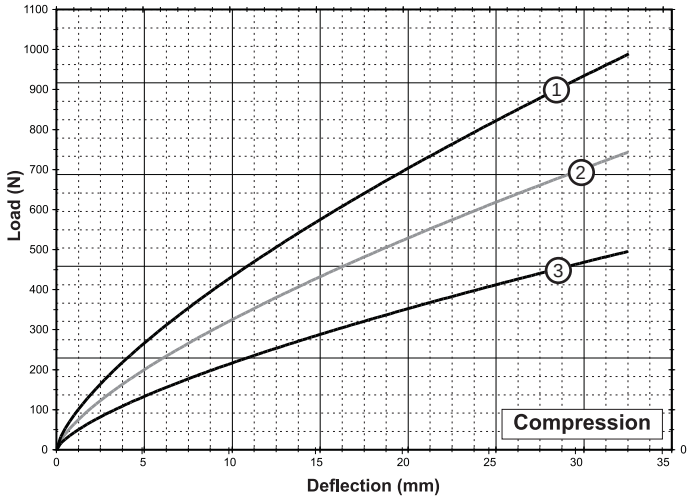

Compression

Curve	Model	Max Static Load N	Max Deflection mm	Kv (vibration) kN/m	Ks (shock) kN/m
1	HR8-600	267	33,1	84	53
2	HR8-400	191	33,1	61	39
3	HR8-200	133	33,1	41	26

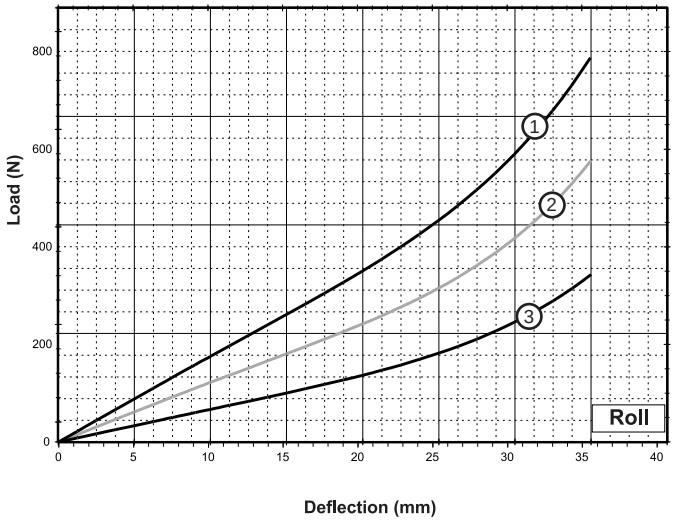

Roll

Curve	Model	Max Static Load N	Max Deflection mm	Kv (vibration) kN/m	Ks (shock) kN/m
1	HR8-600	178	35,6	23	28
2	HR8-400	120	35,6	16	19
3	HR8-200	67	35,6	9	11

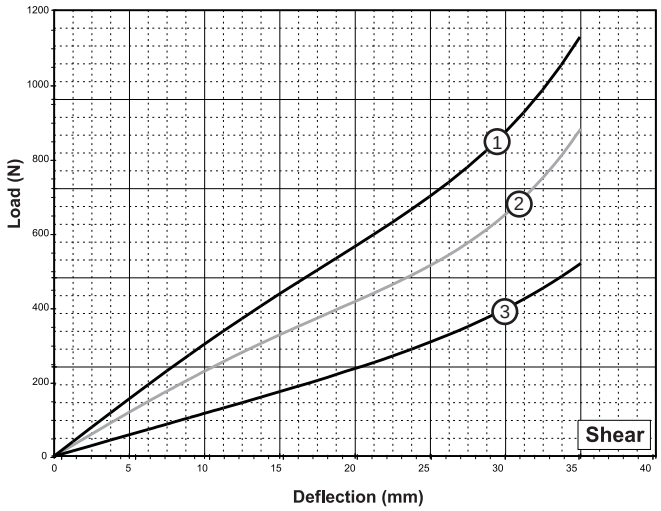

Shear

Curve	Model	Max Static Load N	Max Deflection mm	Kv (vibration) kN/m	Ks (shock) kN/m
1	HR8-600	302	35,6	40	43
2	HR8-400	214	35,6	28	30
3	HR8-200	107	35,6	14	17

Note: Do not extrapolate plotted curves.

HERM (High Energy Rope Mount)

HR12 Series

Technical Data

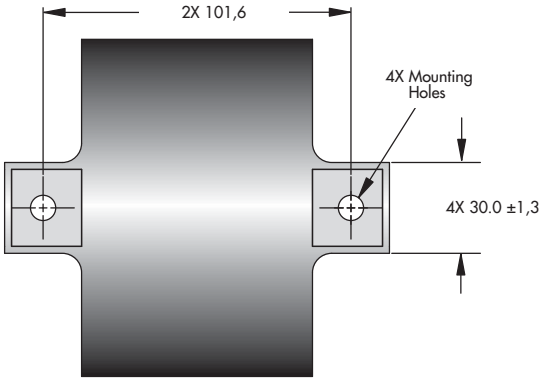

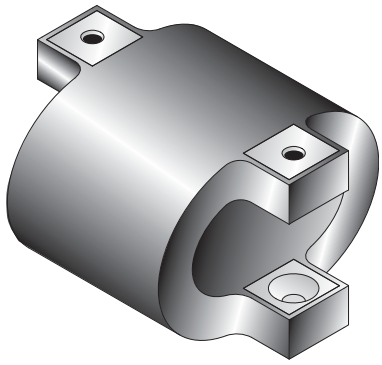

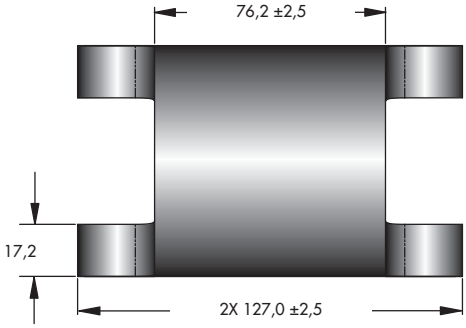

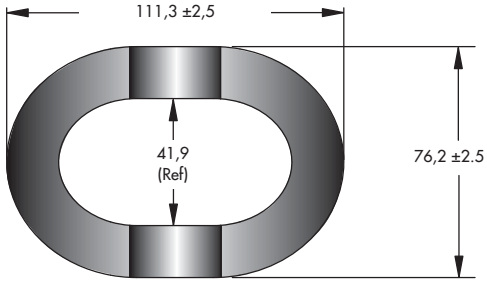

Note: Dimensions are in mm Tolerances are ± 0,25mm

Size	Unit Weight Kg	Mounting Options	Thru Hole mm	Thread mm	C'sink
HR12-600	0,8	B, D, E	Ø9,0 ±0,13	M8 X 1,25	90°
HR12-400	0,8				
HR12-200	0,8				

Model Number Ordering Code

HR12-200 - B L M

- M — Add "M" for Metric — All Mounting Options
- L — Threaded Hole Options: [L] - Helical, Locking, Dry Film Lubricated; [H] - Helical, Free Running
- B — Mounting Options: See Chart
- 200 — Isolator Model: See Sizing Table

Mounting Options

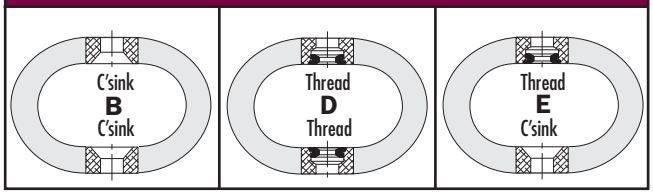

- Meets environmental requirements of MIL-M-17185A

Wire Rope Special Options

Optional materials for the wire rope and mount bars are available upon request. Possibilities include galvanized rope, bell mouth mount bars or stainless steel rope and mount bars. Please contact ITT Enidine to discuss in more detail. Minimum purchase quantities may apply. See page 155.

ITT ENGINEERED FOR LIFE
www.enidine.eu Email: info@enidine.eu Tel.: +49 6063 9314 0 Fax: +49 6063 9314 44

Static
Load vs. Deflection

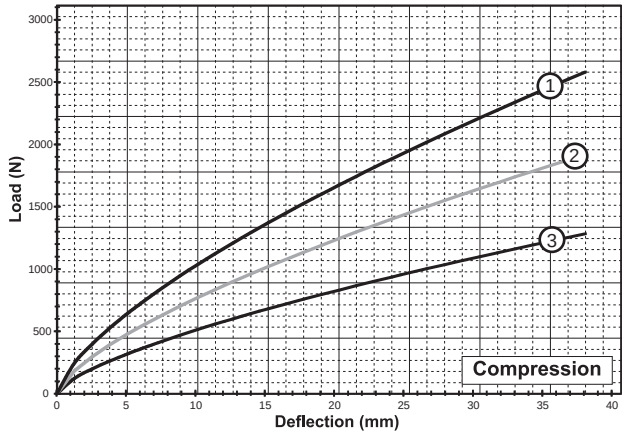

Compression

Curve	Model	Max Static Load N	Max Deflection mm	Kv (vibration) kN/m	Ks (shock) kN/m
1	HR12-600	689	38,1	204	121
2	HR12-400	512	38,1	151	89
3	HR12-200	356	38,1	102	60

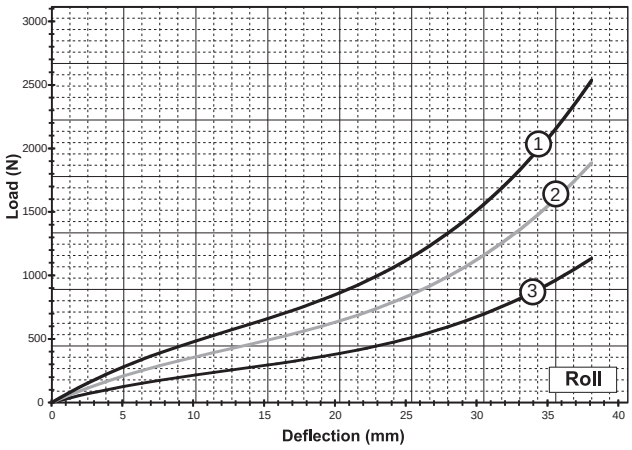

Roll

Curve	Model	Max Static Load N	Max Deflection mm	Kv (vibration) kN/m	Ks (shock) kN/m
1	HR12-600	534	38,1	79	75
2	HR12-400	400	38,1	59	57
3	HR12-200	245	38,1	35	34

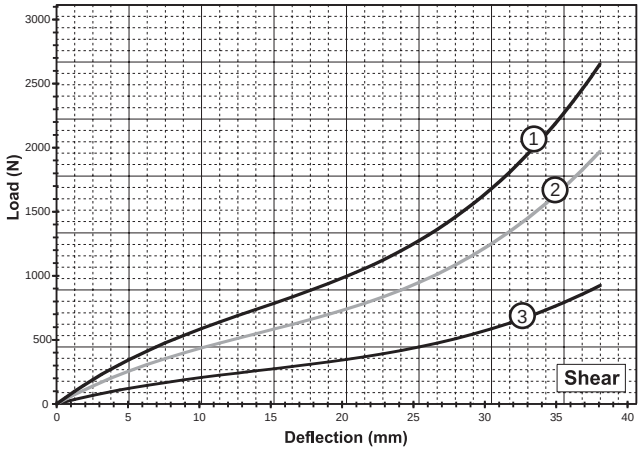

Shear

Curve	Model	Max Static Load N	Max Deflection mm	Kv (vibration) kN/m	Ks (shock) kN/m
1	HR12-600	645	38,1	97	84
2	HR12-400	467	38,1	72	63
3	HR12-200	222	38,1	34	30

Note: Do not extrapolate plotted curves.

HERM (High Energy Rope Mount)
HR16, 8.0 Series

Technical Data

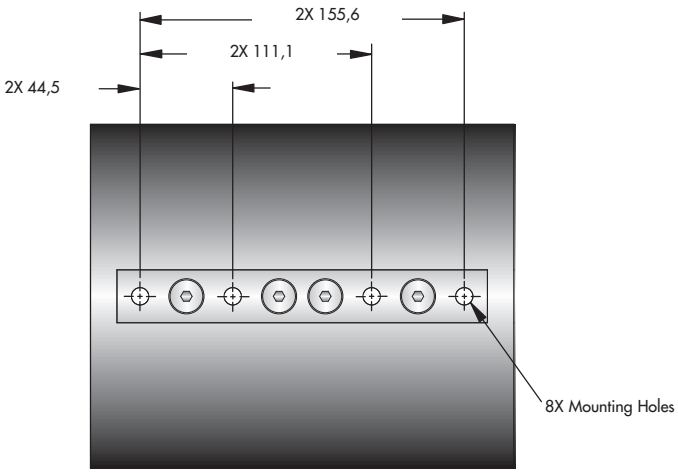

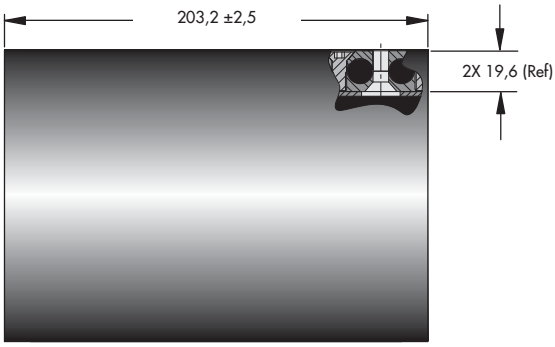

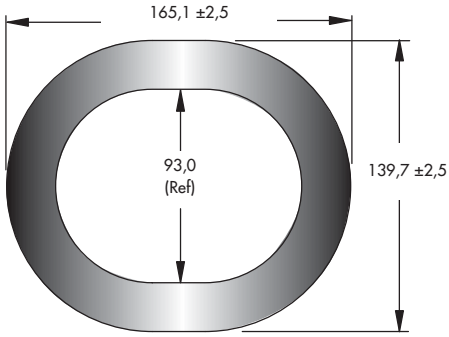

Note: Dimensions are in mm Tolerances are ± 0,25mm

Size	Unit Weight Kg	Mounting Option	Thru Hole mm	C'sink
HR16-606	4,0	B	Ø8,3 ±0,13 ±0,38	82°
HR16-406	3,4			
HR16-206	2,7			

Model Number Ordering Code

HR16 -206 - B P

- Mount Bar Options: *[ ] - 6061-T6 Aluminum (or Equiv.) Chem Conv. Coated
  [Y] - 6061-T6 Aluminum (or Equiv.) Anodized
  [P] - 302/304 Stainless Steel (or Equiv.) Passivated
- Mounting Option: See Chart
- Isolator Model: See Sizing Table

Mounting Option

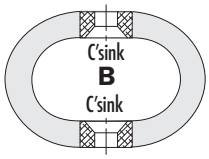

• Meets environmental requirements of MIL-M-17185A

* Standard features. Any non-standard items may require longer lead times. Call for quotation.

ITT ENGINEERED FOR LIFE
www.enidine.eu Email: info@enidine.eu Tel.: +49 6063 9314 0 Fax: +49 6063 9314 44

HERM (High Energy Rope Mounts)
HR16, 8.0 Series

Technical Data

Static
Load vs. Deflection

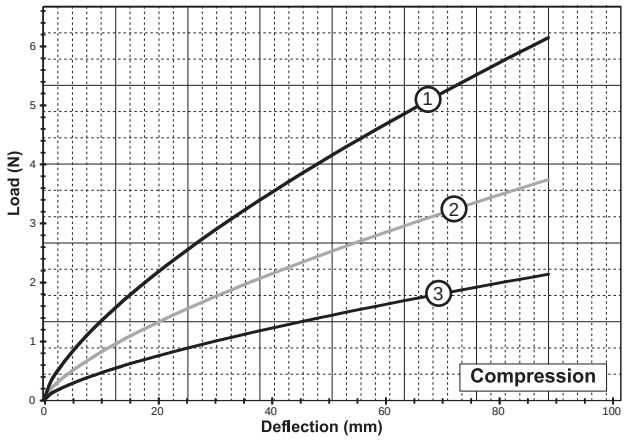

Compression

Curve	Model	Max Static Load N	Max Deflection mm	Kv (vibration) kN/m	Ks (shock) kN/m
1	HR16-606	1 624	88,9	261	123
2	HR16-406	1 001	88,9	159	74
3	HR16-206	556	88,9	91	43

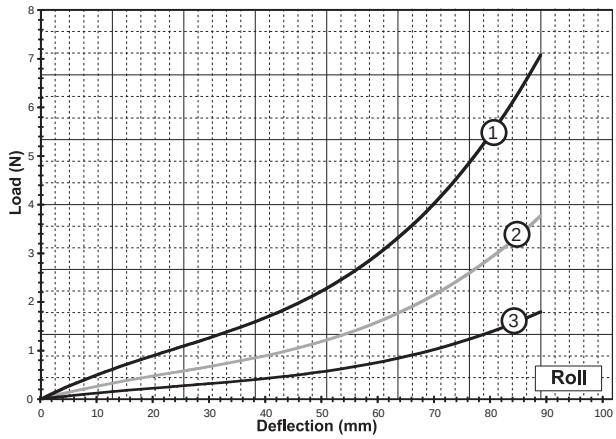

Roll

Curve	Model	Max Static Load N	Max Deflection mm	Kv (vibration) kN/m	Ks (shock) kN/m
1	HR16-606	1 134	88,9	73	83
2	HR16-406	601	88,9	39	44
3	HR16-206	289	88,9	18	21

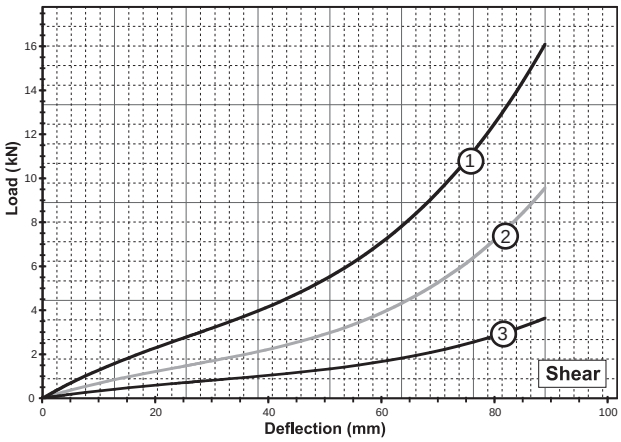

Shear

Curve	Model	Max Static Load N	Max Deflection mm	Kv (vibration) kN/m	Ks (shock) kN/m
1	HR16-606	2 891	88,9	1 065 187	195
2	HR16-406	1 535	88,9	565 99	121
3	HR16-206	734	88,9	275 48	45

Note: Do not extrapolate plotted curves.

HERM (High Energy Rope Mount)

HR16, 9.5 Series

Technical Data

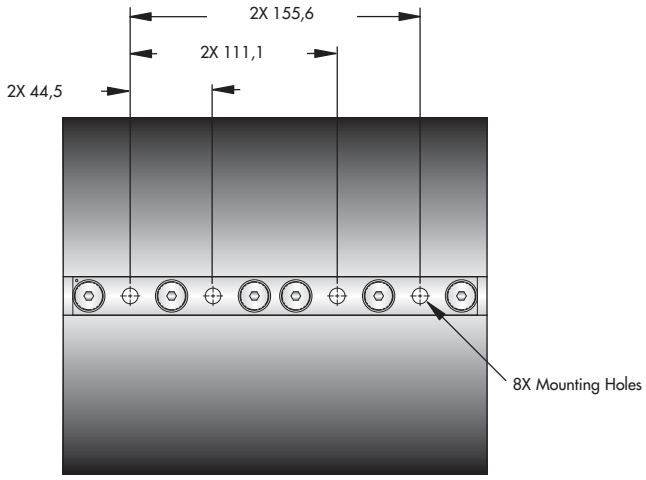

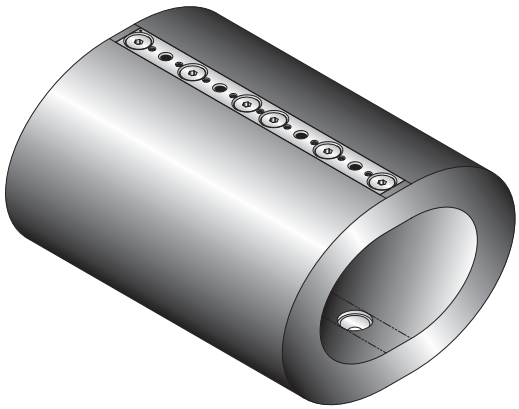

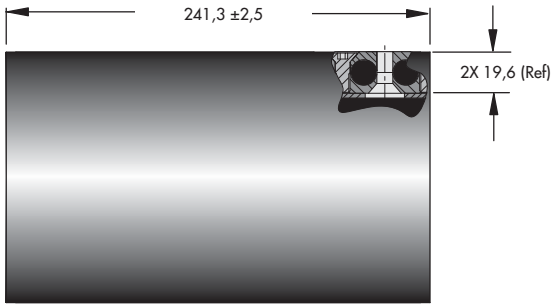

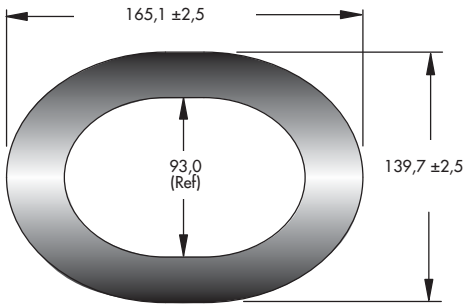

Note: Dimensions are in mm Tolerances are ± 0,25mm

Size	Unit Weight Kg	Mounting Option	Thru Hole mm	C'sink
HR16-600	4,8	B	Ø8,3 ±0,13 ±0,38	82°
HR16-400	4,1			
HR16-200	3,4			

Model Number Ordering Code

HR16 -200 - B

- Mounting Option: See Chart
- Isolator Model: See Sizing Table

Mounting Option

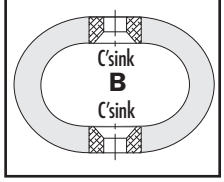

Wire Rope Special Options

Optional materials for the wire rope and mount bars are available upon request. Possibilities include galvanized rope, bell mouth mount bars or stainless steel rope and mount bars. Please contact ITT Enidine to discuss in more detail. Minimum purchase quantities may apply. See page 155.

- Meets environmental requirements of MIL-M-17185A

ITT ENGINEERED FOR LIFE
www.enidine.eu Email: info@enidine.eu Tel.: +49 6063 9314 0 Fax: +49 6063 9314 44

Static
Load vs. Deflection

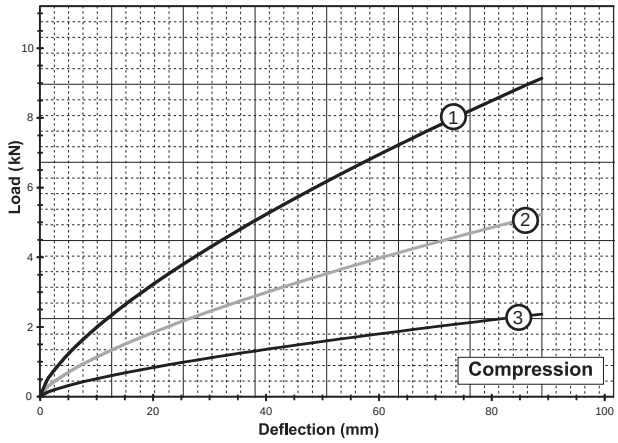

Compression

Curve	Model	Max Static Load N	Max Deflection mm	Kv (vibration) kN/m	Ks (shock) kN/m
1	HR16-600	2 424	88,9	389	181
2	HR16-400	1 379	88,9	221	103
3	HR16-200	623	88,9	100	47

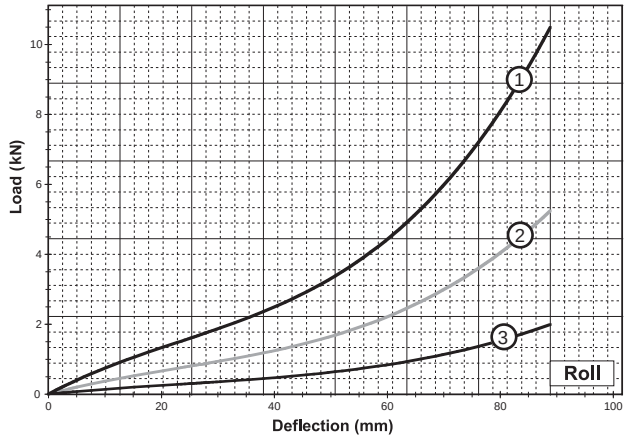

Roll

Curve	Model	Max Static Load N	Max Deflection mm	Kv (vibration) kN/m	Ks (shock) kN/m
1	HR16-600	1 668	88,9	108	123
2	HR16-400	823	88,9	53	61
3	HR16-200	311	88,9	20	24

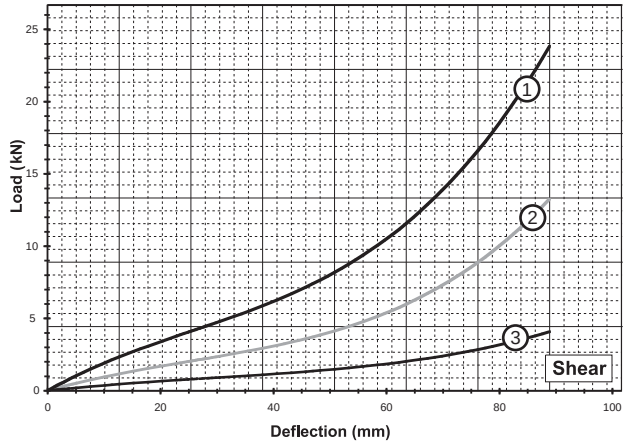

Shear

Curve	Model	Max Static Load N	Max Deflection mm	Kv (vibration) kN/m	Ks (shock) kN/m
1	HR16-600	4 270	88,9	276	290
2	HR16-400	2 135	88,9	138	152
3	HR16-200	823	88,9	53	52

Note: Do not extrapolate plotted curves.

HERM (High Energy Rope Mount)
HR20 Series

Technical Data

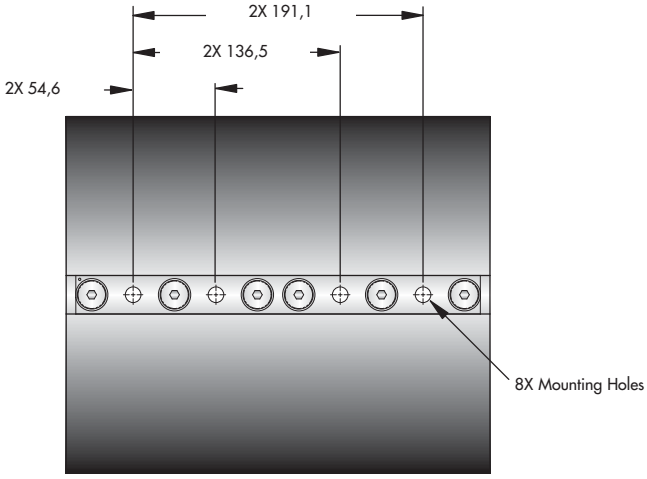

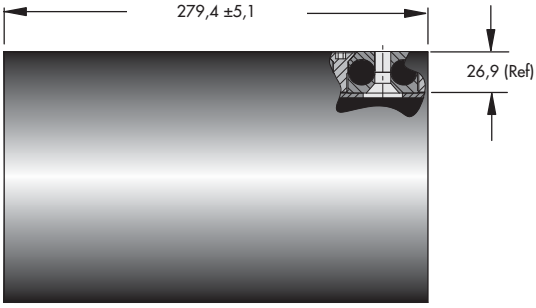

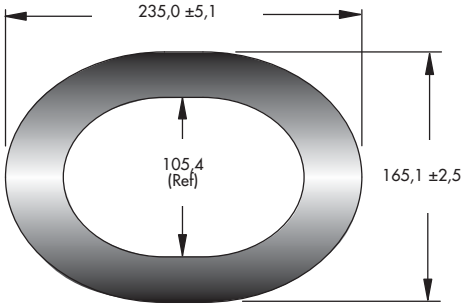

Note: Dimensions are in mm Tolerances are ± 0,25mm

Size	Unit Weight Kg	Mounting Option	Thru Hole mm	C'sink
HR20-600	9,5	B	Ø10,3 $^{\pm 0,13}_{\pm 0,38}$	82°
HR20-400	8,2			
HR20-200	6,4			

Model Number Ordering Code

HR20 - 200 - B

- Mounting Option: See Chart
- Isolator Model: See Sizing Table

Mounting Option

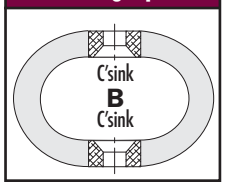

Wire Rope Special Options

Optional materials for the wire rope and mount bars are available upon request. Possibilities include galvanized rope, bell mouth mount bars or stainless steel rope and mount bars. Please contact ITT Enidine to discuss in more detail. Minimum purchase quantities may apply. See page 155.

- Meets environmental requirements of MIL-M-17185A

ITT ENGINEERED FOR LIFE
www.enidine.eu Email: info@enidine.eu Tel.: +49 6063 9314 0 Fax: +49 6063 9314 44

Static
Load vs. Deflection

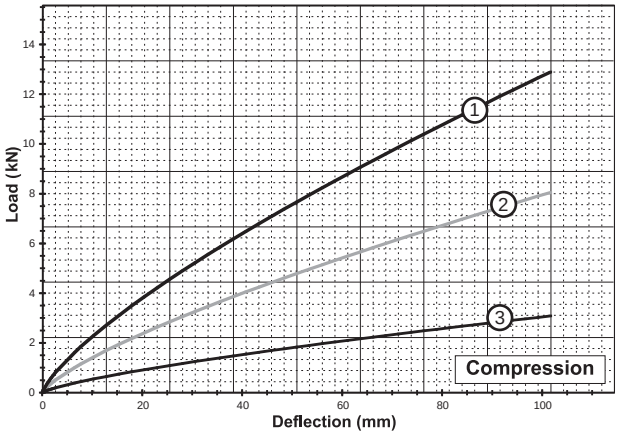

Compression

Curve	Model	Max Static Load N	Max Deflection mm	Kv (vibration) kN/m	Ks (shock) kN/m
1	HR20-600	3 114	101,6	415	218
2	HR20-400	1 935	101,6	259	136
3	HR20-200	734	101,6	99	52

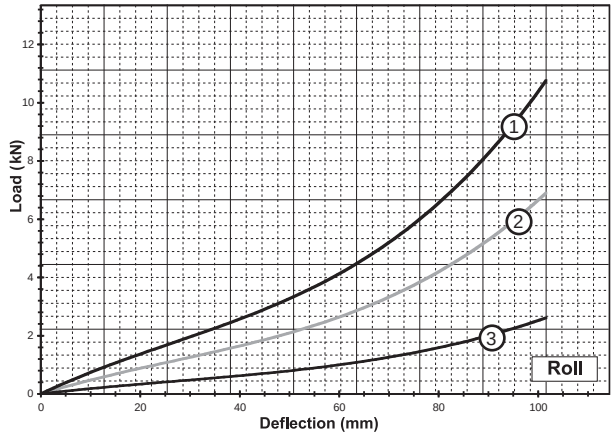

Roll

Curve	Model	Max Static Load N	Max Deflection mm	Kv (vibration) kN/m	Ks (shock) kN/m
1	HR20-600	1 601	101,6	103	118
2	HR20-400	1 023	101,6	67	76
3	HR20-200	400	101,6	25	29

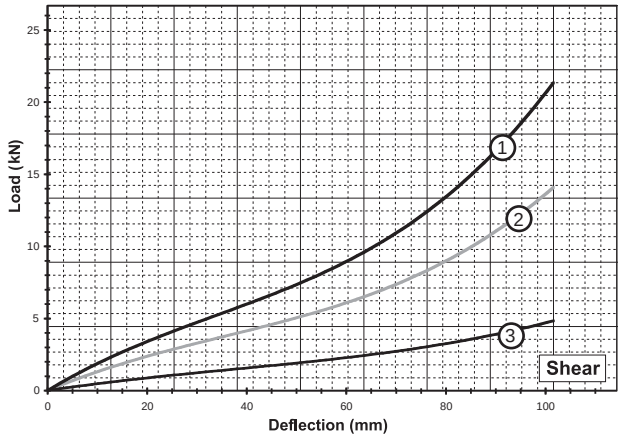

Shear

Curve	Model	Max Static Load N	Max Deflection mm	Kv (vibration) kN/m	Ks (shock) kN/m
1	HR20-600	4 115	101,6	265	252
2	HR20-400	2 869	101,6	186	170
3	HR20-200	1 023	101,6	67	62

Note: Do not extrapolate plotted curves.

HERM (High Energy Rope Mount)
HR28 Series

Technical Data

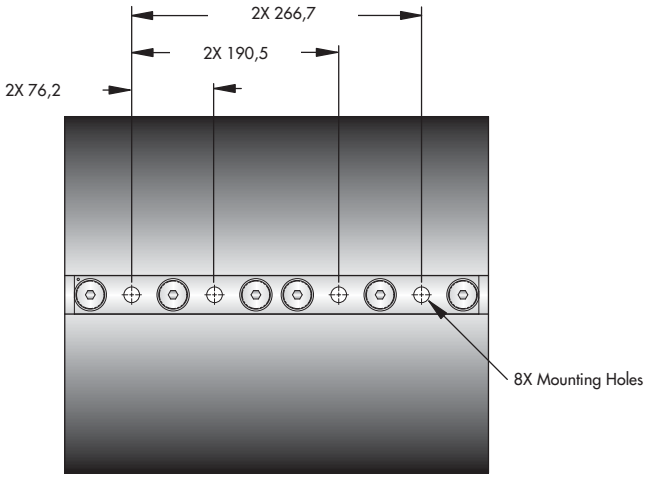

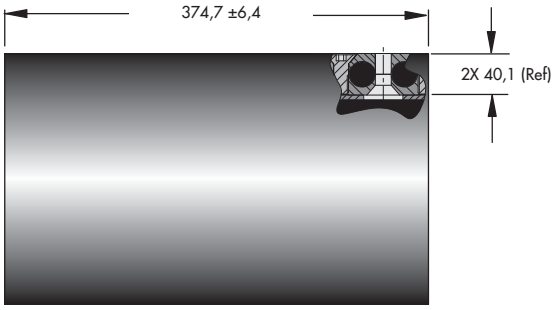

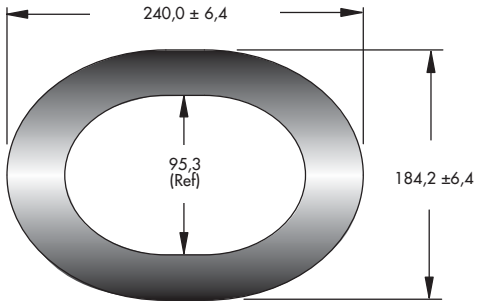

Note: Dimensions are in mm Tolerances are ± 0,25mm

Size	Unit Weight Kg	Mounting Option	Thru Hole mm	C'sink
HR28-600	23	B	Ø13,5 ±0,13 ±0,38	82°
HR28-400	18			
HR28-200	14			

Model Number Ordering Code

HR28 - 200 - B

- B — Mounting Option: See Chart
- 200 — Isolator Model: See Sizing Table

Mounting Option

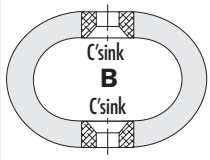

Wire Rope Special Options

Optional materials for the wire rope and mount bars are available upon request. Possibilities include galvanized rope, bell mouth mount bars or stainless steel rope and mount bars. Please contact ITT Enidine to discuss in more detail. Minimum purchase quantities may apply. See page 155.

ITT ENGINEERED FOR LIFE
www.enidine.eu Email: info@enidine.eu Tel.: +49 6063 9314 0 Fax: +49 6063 9314 44

Static
Load vs. Deflection

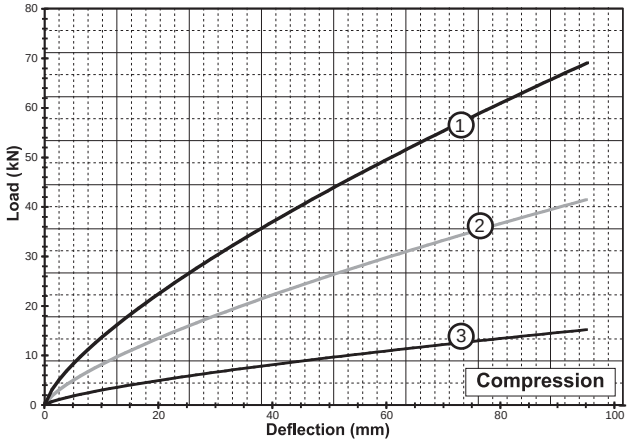

Compression

Curve	Model	Max Static Load kN	Max Deflection mm	Kv (vibration) kN/m	Ks (shock) kN/m
1	HR28-600	17,79	95,3	2 603	1 266
2	HR28-400	10,56	95,3	1 562	759
3	HR28-200	3,87	95,3	573	278

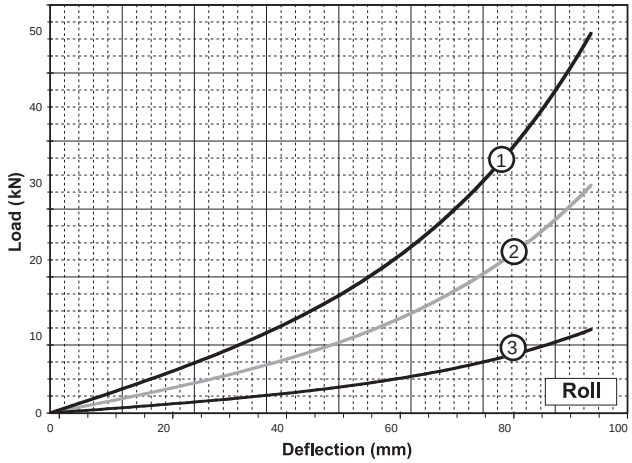

Roll

Curve	Model	Max Static Load kN	Max Deflection mm	Kv (vibration) kN/m	Ks (shock) kN/m
1	HR28-600	4,94	95,3	319	549
2	HR28-400	2,98	95,3	192	329
3	HR28-200	1,09	95,3	70	121

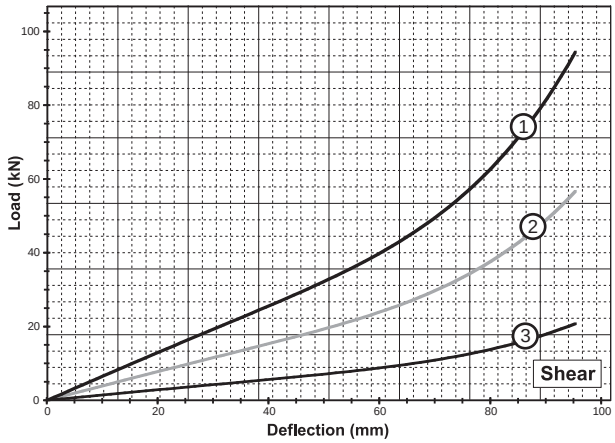

Shear

Curve	Model	Max Static Load kN	Max Deflection mm	Kv (vibration) kN/m	Ks (shock) kN/m
1	HR28-600	13,26	95,3	854	1 106
2	HR28-400	7,96	95,3	512	664
3	HR28-200	2,91	95,3	187	244

Note: Do not extrapolate plotted curves.

HERM (High Energy Rope Mount)
HR40 Series

Technical Data

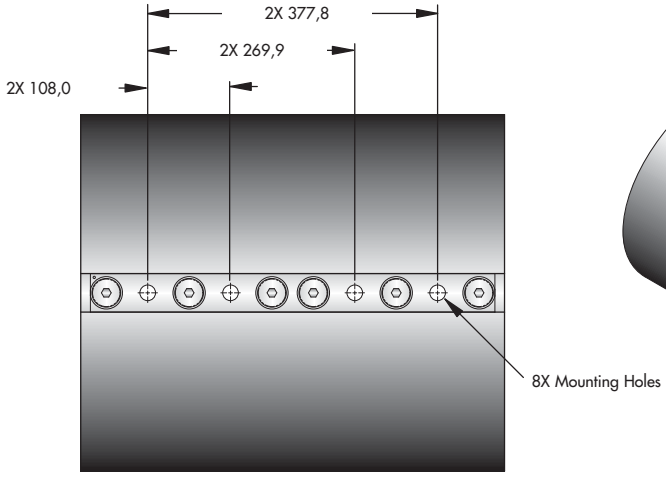

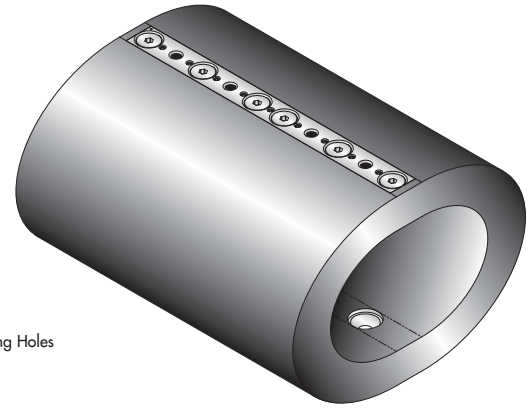

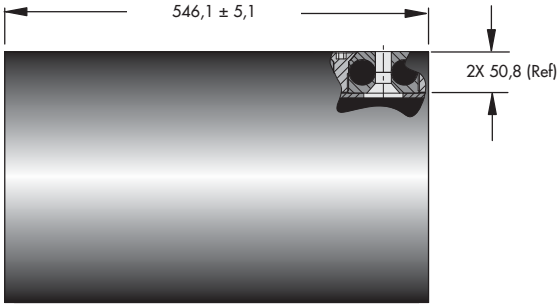

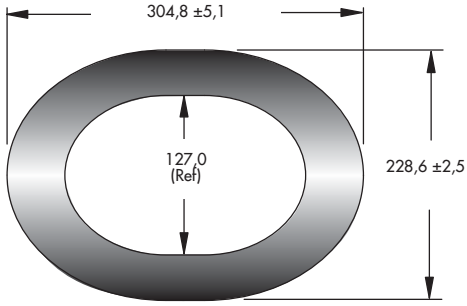

Note: Dimensions are in mm Tolerances are ± 0,25mm

Size	Unit Weight Kg	Mounting Option	Thru Hole mm	C'sink
HR40-600	45	B	Ø19,8 $^{\pm 0,13}_{\pm 0,38}$	82°
HR40-400	38			
HR40-200	30			

Model Number Ordering Code

HR40 -200 - B

- Mounting Option: See Chart
- Isolator Model: See Sizing Table

Mounting Option

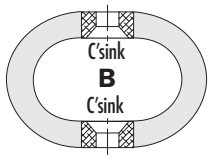

Wire Rope Special Options

Optional materials for the wire rope and mount bars are available upon request. Possibilities include galvanized rope, bell mouth mount bars or stainless steel rope and mount bars. Please contact ITT Enidine to discuss in more detail. Minimum purchase quantities may apply. See page 155.

- Meets environmental requirements of MIL-M-17185A

ITT ENGINEERED FOR LIFE
www.enidine.eu Email: info@enidine.eu Tel.: +49 6063 9314 0 Fax: +49 6063 9314 44

Static
Load vs. Deflection

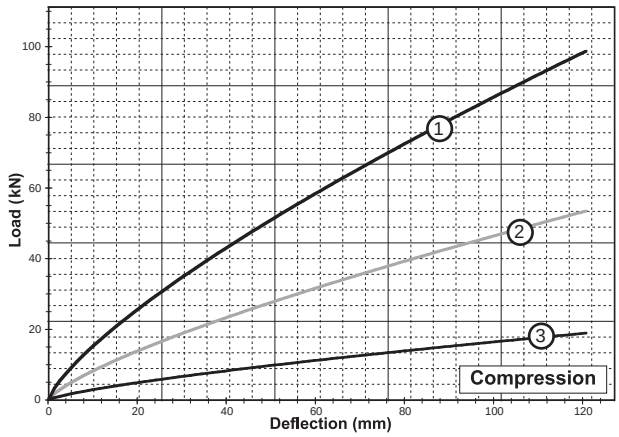

Compression

Curve	Model	Max Static Load kN	Max Deflection mm	Kv (vibration) kN/m	Ks (shock) kN/m
1	HR40-600	23,80	120,7	2 793	1 403
2	HR40-400	12,90	120,7	1 513	760
3	HR40-200	4,56	120,7	535	269

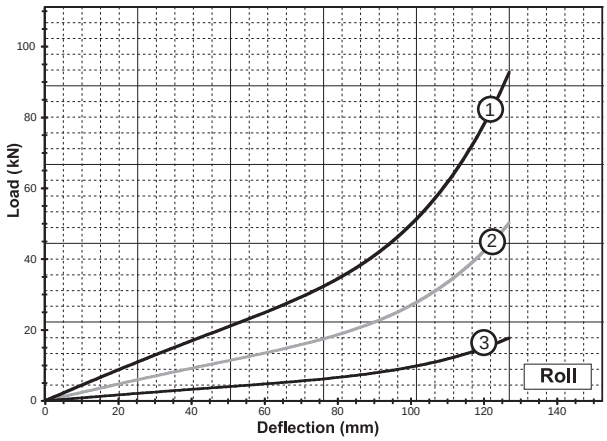

Roll

Curve	Model	Max Static Load kN	Max Deflection mm	Kv (vibration) kN/m	Ks (shock) kN/m
1	HR40-600	8,90	127	574	758
2	HR40-400	4,83	127	311	427
3	HR40-200	1,71	127	110	149

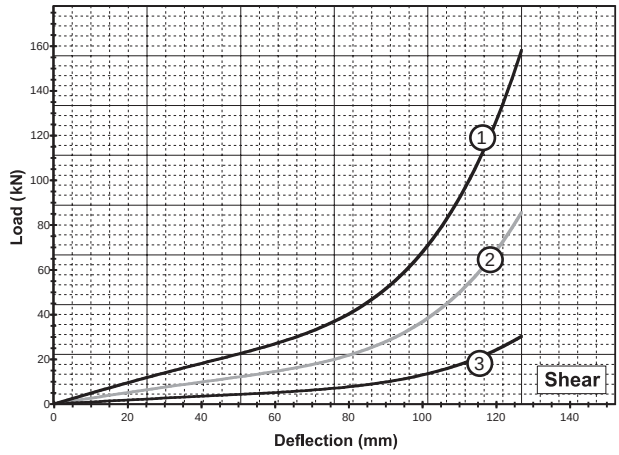

Shear

Curve	Model	Max Static Load kN	Max Deflection mm	Kv (vibration) kN/m	Ks (shock) kN/m
1	HR40-600	9,74	127	628	1 012
2	HR40-400	5,29	127	341	551
3	HR40-200	1,87	127	120	189

Note: Do not extrapolate plotted curves.

WEAR™ (Wire Energy Absorbing Rope) pipe restraints are uniquely packaged wire rope isolators designed to protect structures from steady state vibration and isolate them from seismic and dynamic loads. These new generation energy absorbing restraints feature simple construction. There are no oils, seals or complex moving parts required to perform their function. The design has eliminated the problems often associated with hydraulic or mechanical restraints which are complex and prone to failure.

The Wire Rope Isolator, which is the basic element of the technology has been successfully used by the military for more than 25 years. As a result, it conforms to government and military quality control requirements. The restraint is thus exempt from surveillance testing. In-place visual inspection is all that is required to assure operability. The WEAR™ can be provided with a wide range of piping accessories and can be supplied to ISO 9001, Mil-Q, Mil-I, B31.1 or ASME Section III subsection NF.

Options Available:

Various end connections are available to meet existing hardware such as Bergen Paterson, basic Engineers, PSA, Grinnel and others. For sizing or specific application information, call your local representative or ITT Enidine directly.

Typical Applications:

- Pipe Restraint
- Hydraulic Transients
- Power Generating Plants
- Chemical Plants
- Seismic Restraints
- Steady State Vibration
- Nuclear Plants
- Refineries
- Structural Vibration
- Wind Loading
- Pulp and Paper Mills

WEAR™ Benefits:

- Repeatable
- Environmentally Stable
- Low Structural Loading
- Dissipate Energy
- Wide Operating Temperature Range
- Proven Technology
- Simple Construction
- Corrosion Resistant
- High Cycle Fatigue Life
- No Maintenance

Environmental Conditions:

Normal Temperature:	-40ºC to 100ºC
Faulted Temperature:	-40ºC to 175ºC
Humidity:	100% RH
Radiation:	1 x 10^9 RAD
Pressure:	-1 bar to 7 bar
	0 atm to 7 atm

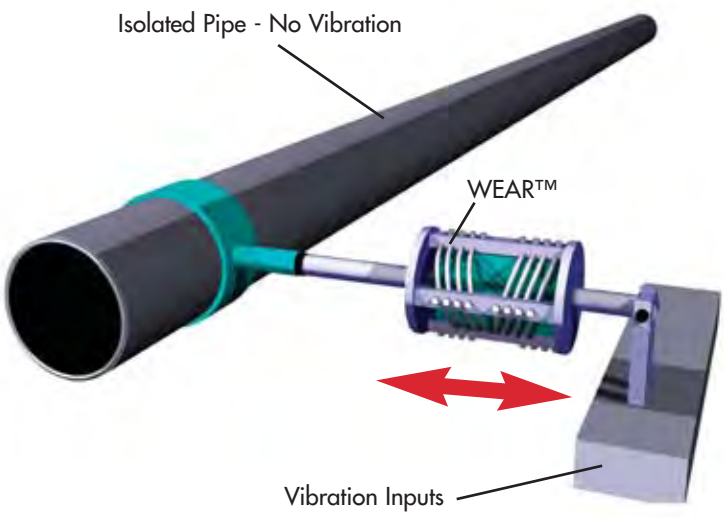

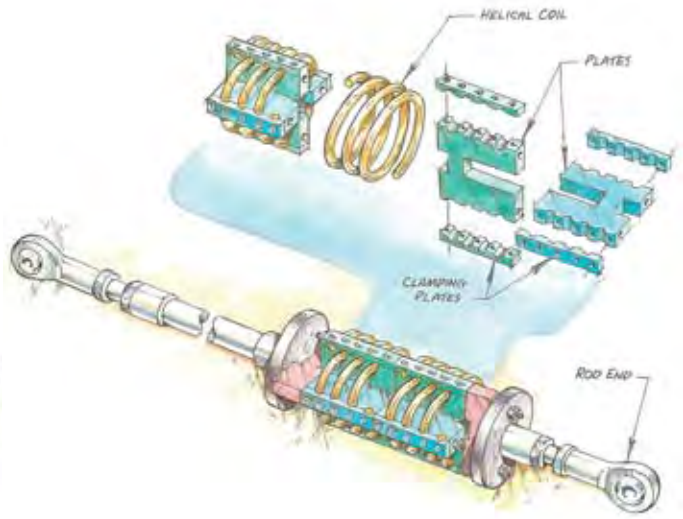

Captured every quarter loop, wire rope coil will not collapse; two-pitch design prevents twisting.

Wire Mesh Isolators

Wire mesh material can be manufactured in a multitude of shapes and sizes to accommodate your specific application. When exercised, the wire mesh damping elements convert input energy to heat. Friction is created when knitted or woven stainless steel wire strands are displaced relative to one another. Knitted metals have inherent resiliency and provide high-damping characteristics and non-linear spring rates.

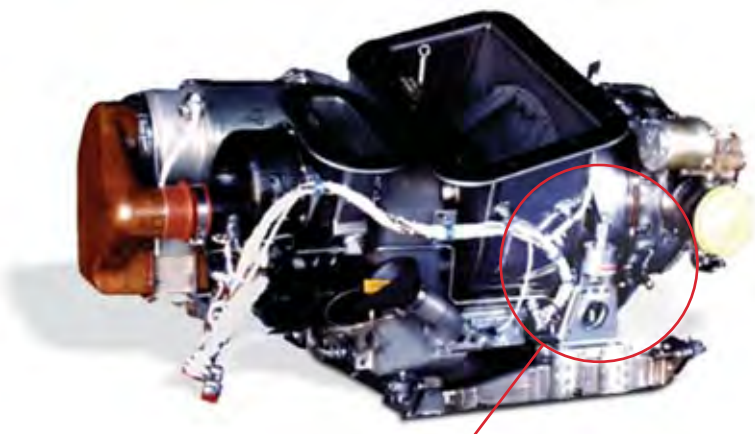

Wire Mesh Isolator

Wire Mesh Isolator Features:

- Wide operating temperature range
- Long service life
- Environmental compatability
- Maintenance-free operation
- Custom sizes and shapes available

Wire Mesh Isolator Typical Applications:

- Auxiliary Power Units
- Engines
- Communications Equipment
- Medical Equipment
- Sensitive Mobile Electronics

Material Development:

If your application parameters fall outside of the standard product line, you can be sure that ITT Enidine has the engineering capabilities and resources to design, test and recommend a custom solution to suit your specific needs:

- 3D Modeling
- System Analysis (Modal, Linear/Non-Linear, Dynamic Analysis and Simulation, Finite Element, Shock and Vibration)
- In-house test facility for prototypes and production models: Static Load/Deflection, Life Cycle, Vibration Frequency, Dynamic Load, Random Input and High Frequency Noise
- AS-9100 Certified
- ISO 9001 Certified

Application Worksheet

FAX NO.: _____

DATE: _____

ATTN: _____

COMPANY: _____

The ITT Enidine Application Worksheet makes shock absorber sizing and selection easier or visit www.enisize.com

Fax, phone, or mail worksheet data to ITT Enidine headquarters or your nearest ITT Enidine subsidiary/affiliate or distributor. (See catalog back cover for ITT Enidine locations, or visit www.enidine.eu for a list of ITT Enidine distributors.)

Upon ITT Enidine's receipt of this worksheet, you will receive a detailed analysis of your application and product recommendations. (For custom design projects, ITT Enidine representatives will consult with you for specification requirements.)

GENERAL INFORMATION

CONTACT: _____

DEPT/TITLE: _____

COMPANY: _____

ADDRESS: _____

_____

TEL: _____ FAX: _____

EMAIL: _____

PRODUCTS MANUFACTURED: _____

_____

APPLICATION DESCRIPTION

_____

_____

Motion Direction (Check One):

☐ Horizontal ☐ Vertical ☐ Up ☐ Down ☐ Incline Angle _____ Height _____

☐ Rotary Horizontal ☐ Rotary Vertical ☐ Up ☐ Down

Weight (Min./Max.): _____ (Kg)

Cycle Rate _____ (cycles/hour)

Additional Propelling Force (If known) _____ (N)

☐ Air Cyl: Bore ____ (mm) Max. Pressure ____(bar) Rod Dia. ____(mm)

☐ Hydraulic Cyl: Bore ____ (mm) Max. Pressure ____(bar)
Rod Dia. ____ (mm)

☐ Motor _____ (kW) Torque _____(Nm)

Ambient Temp. _____(°C)

Environmental Considerations: _____

_____

SHOCK ABSORBER APPLICATION

(All Data Taken at Shock Absorber)

Number of Shock Absorbers to Stop Load

Impact Velocity (min./max.)_____ (m/s)

Shock Absorber Stroke Requirements: _____(mm)

(a) Load Requirements _____(m/s^2)

RATE CONTROL APPLICATION

(All Data Taken at Rate Control)

Number of Rate Controls to Control the Load _____

Control Direction: ☐ Tension (T) ☐ Compression (C)

Required Stroke: _____(mm) Est. Stroke Time _____(s)

Estimated Velocity at the Rate Control _____(m/s)

Under the ITT Enidine Inc. brand, we are a global leader in the design and manufacture of standard and custom energy absorption and vibration isolation product solutions. Product ranges include shock absorbers, rate controls, air springs, wire rope isolators, heavy duty buffers and emergency stops. From Original Equipment Manufactures (OEM) to aftermarket applications, ITT Enidine offers a unique combination of product selection, engineering excellence and technical support to meet the toughest energy absorption requirements.

Common Applications:

- Automotive
- Auto, Storage and Retrieval
- Bridges and Structures
- Conveyor Systems
- Steel Mills
- Plastic Bottle Manufacturing
- Packaging Machinery
- Overhead Cranes
- Robotics
- Electronics Cabinets
- Sub-Sea Equipment
- Medical Equipment

ITT Enidine provides energy absorption and vibration isolation solutions to meet the challenging demands of heavy industries.

ENGINEERED FOR LIFE

ITT Enidine Inc.
7 Centre Drive
Orchard Park, New York 14127
Phone: 716-662-1900
Fax: 716-667-1385
Email: industrialsales@enidine.com
Email: aviationsales@enidine.com
www.enidine.com

ITT Control Technologies - EMEA
Werkstrasse 5
D-64732, Bad Koenig, Germany
Phone: +49 6063 9314 0
Fax: +49 6063 9314 44
Email: info@enidine.eu
www.enidine.eu

Enidine Hangzhou
J Room 19th FL ZMI Plaza
No. 445 Kaixuan Road
Hangzhou, Zhejiang, China
Phone: 0086-571-86714399
Fax: 0086-571-86714055
Email: enidineCN@itt.com
www.enidine.cn

Enidine Co. Ltd.
11-3,5-Chrome, Hibarigaoka
Zama-shi, Kanagawa
228-0003
Japan
Phone: 81-46-298-3611
Fax: 81-46-298-3621
Email: support.enidinejp@itt.com
www.enidine.co.jp

ENI872 09/12 20M